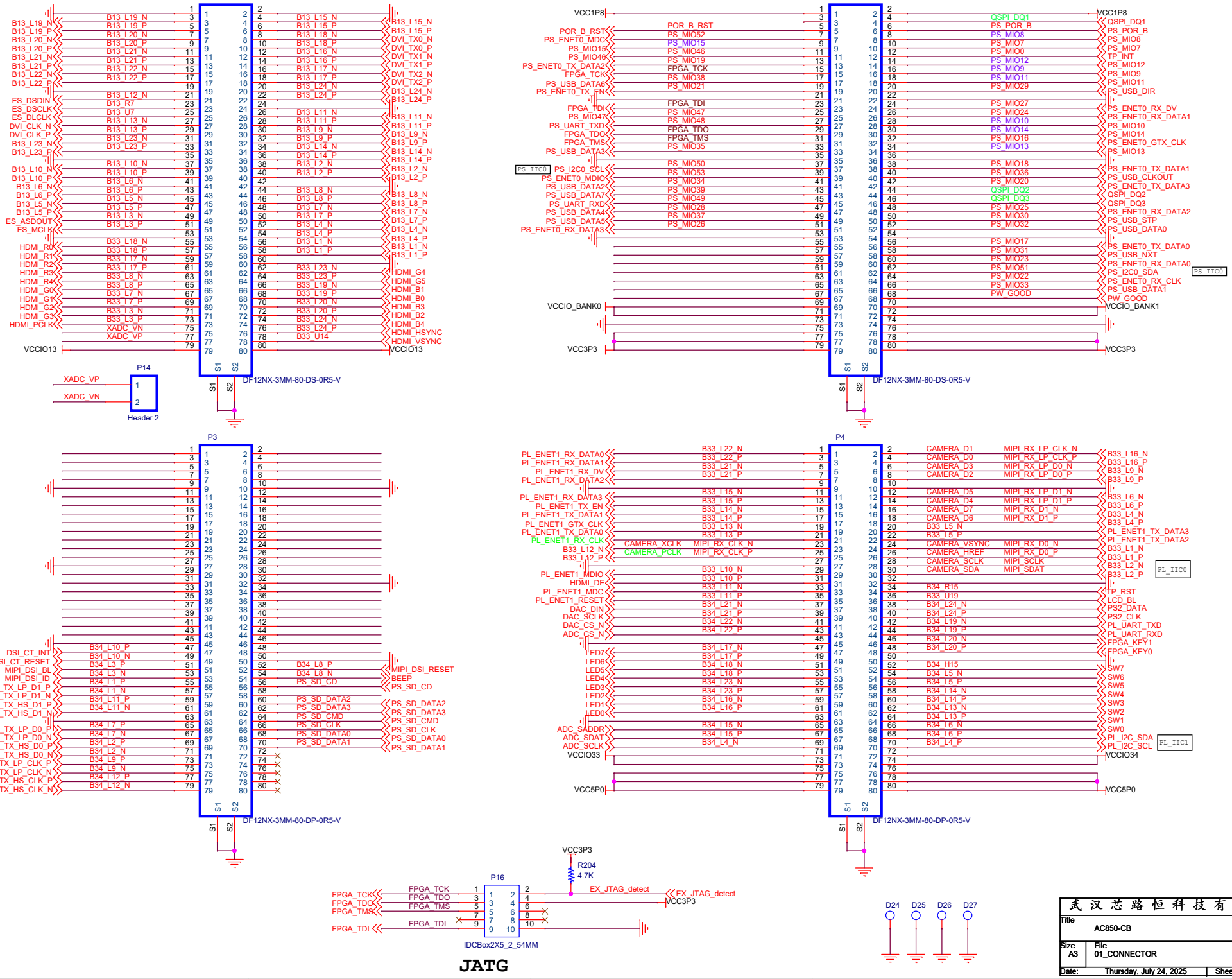
P1
B13_L19_N
B13_L19_P
B13_L20_N
B13_L20_P
B13_L21_N
B13_L21_P
B13_L22_N
B13_L22_P
B13_L12_N
ES_DSDIN
ES_DSCLK
ES_DLCLK
DVI_CLK_N
DVI_CLK_P
B13_L23_N
B13_L23_P
B13_L10_N
B13_L10_P
B13_L6_N
B13_L6_P
B13_L5_N
B13_L5_P
ES_ASDOUT
ES_MCLK
HDMI_R0
HDMI_R1
HDMI_R2
HDMI_R3
HDMI_R4
HDMI_G0
HDMI_G1
HDMI_G2
HDMI_G3
HDMI_PCLK
XADC_VN
XADC_VP
VCCIO13
B13_L15_N
B13_L15_P
B13_L18_N
B13_L18_P
B13_L16_N
B13_L16_P
B13_L17_N
B13_L17_P
B13_L24_N
B13_L24_P
B13_L11_N
B13_L11_P
B13_L9_N
B13_L9_P
B13_L14_N
B13_L14_P
B13_L2_N
B13_L2_P
B13_L8_N
B13_L8_P
B13_L7_N
B13_L7_P
B13_L4_N
B13_L4_P
B13_L1_N
B13_L1_P
B33_L23_N
B33_L23_P
B33_L19_N
B33_L19_P
B33_L20_N
B33_L20_P
B33_L24_N
B33_L24_P
B33_U14
HDMI_G4
HDMI_G5
HDMI_B1
HDMI_B0
HDMI_B3
HDMI_B2
HDMI_B4
HDMI_HSYNC
HDMI_VSYNC
VCCIO13
S1
S2
DF12NX-3MM-80-DS-0R5-V
P14
XADC_VP
XADC_VN
Header 2
P2
VCC1P8
POR_B_RST
PS_ENET0_MDC
PS_MIO15
PS_MIO46
PS_MIO19
PS_ENET0_TX_DATA2
FPGA_TCK
PS_USB_DATA6
PS_ENET0_TX_EN
FPGA_TDI
PS_MIO47
PS_UART_TXD
FPGA_TDO
FPGA_TMS
PS_USB_DATA3
PS_IIC0
PS_I2C0_SCL
PS_ENET0_MDIO
PS_USB_DATA2
PS_USB_DATA7
PS_UART_RXD
PS_USB_DATA4
PS_USB_DATA5
PS_ENET0_RX_DATA3
VCCIO_BANK0
VCC3P3
PS_MIO52
PS_MIO53
PS_MIO34
PS_MIO39
PS_MIO49
PS_MIO28
PS_MIO37
PS_MIO26
PS_MIO50
QSPI_DQ1
PS_POR_B
PS_MIO8
PS_MIO7
PS_MIO0
PS_MIO12
PS_MIO9
PS_MIO11
PS_USB_DIR
PS_MIO27
PS_MIO24
PS_MIO10
PS_MIO14
PS_MIO16
PS_MIO13
PS_MIO18
PS_MIO36
PS_MIO20
QSPI_DQ2
QSPI_DQ3
PS_MIO25
PS_MIO30
PS_MIO32
PS_MIO17
PS_MIO31
PS_MIO23
PS_MIO51
PS_MIO22
PS_MIO33
PW_GOOD
VCCIO_BANK1
PS_ENET0_RX_DV
PS_ENET0_RX_DATA1
PS_ENET0_GTX_CLK
PS_ENET0_TX_DATA1
PS_USB_CLKOUT
PS_ENET0_TX_DATA3
PS_ENET0_RX_DATA2
PS_USB_STP
PS_USB_DATA0
PS_ENET0_TX_DATA0
PS_USB_NXT
PS_ENET0_RX_DATA0
PS_I2C0_SDA
PS_ENET0_RX_CLK
PS_USB_DATA1
P3
DSI_CT_INT
DSI_CT_RESET
MIPI_DSI_BL
MIPI_DSI_ID
MIPI_TX_LP_D1_P
MIPI_TX_LP_D1_N
MIPI_TX_HS_D1_P
MIPI_TX_HS_D1_N
MIPI_TX_LP_D0_P
MIPI_TX_LP_D0_N
MIPI_TX_HS_D0_P
MIPI_TX_HS_D0_N
MIPI_TX_LP_CLK_P
MIPI_TX_LP_CLK_N
MIPI_TX_HS_CLK_P
MIPI_TX_HS_CLK_N
B34_L10_P
B34_L10_N
B34_L3_P
B34_L3_N
B34_L1_P
B34_L1_N
B34_L11_P
B34_L11_N
B34_L7_P
B34_L7_N
B34_L2_P
B34_L2_N
B34_L9_P
B34_L9_N
B34_L12_P
B34_L12_N
B34_L8_P
B34_L8_N
PS_SD_CD
PS_SD_DATA2
PS_SD_DATA3
PS_SD_CMD
PS_SD_CLK
PS_SD_DATA0
PS_SD_DATA1
MIPI_DSI_RESET
BEEP
PS_SD_CD
PS_SD_DATA2
PS_SD_DATA3
PS_SD_CMD
PS_SD_CLK
PS_SD_DATA0
PS_SD_DATA1
DF12NX-3MM-80-DP-0R5-V
P4
PL_ENET1_RX_DATA0
PL_ENET1_RX_DATA1
PL_ENET1_RX_DV
PL_ENET1_RX_DATA2
PL_ENET1_RX_DATA3
PL_ENET1_TX_EN
PL_ENET1_TX_DATA1
PL_ENET1_GTX_CLK
PL_ENET1_TX_DATA0
PL_ENET1_RX_CLK
B33_L12_N
B33_L12_P
PL_ENET1_MDIO
HDMI_DE
PL_ENET1_MDC
PL_ENET1_RESET
DAC_DIN
DAC_SCLK
DAC_CS_N
ADC_CS_N
LED7
LED6
LED5
LED4
LED3
LED2
LED1
LED0
ADC_SADDR
ADC_SDAT
ADC_SCLK
VCCIO33
VCC5P0
B33_L22_N
B33_L22_P
B33_L21_N
B33_L21_P
B33_L15_N
B33_L15_P
B33_L14_N
B33_L14_P
B33_L13_N
B33_L13_P
CAMERA_XCLK
CAMERA_PCLK
MIPI_RX_CLK_N
MIPI_RX_CLK_P
B33_L10_N
B33_L10_P
B33_L11_N
B33_L11_P
B34_L21_N
B34_L21_P
B34_L22_N
B34_L22_P
B34_L17_N
B34_L17_P
B34_L18_N
B34_L18_P
B34_L23_N
B34_L23_P
B34_L16_N
B34_L16_P
B34_L15_N
B34_L15_P
B34_L4_N
CAMERA_D1
CAMERA_D0
CAMERA_D3
CAMERA_D2
CAMERA_D5
CAMERA_D4
CAMERA_D7
CAMERA_D6
CAMERA_VSYNC
CAMERA_HREF
CAMERA_SCLK
CAMERA_SDA
B34_R15
B33_U19
B34_L24_N
B34_L24_P
B34_L19_N
B34_L19_P
B34_L20_N
B34_L20_P
B34_H15
B34_L5_N
B34_L5_P
B34_L14_N
B34_L14_P
B34_L13_N
B34_L13_P
B34_L6_N
B34_L6_P
B34_L4_P
MIPI_RX_LP_CLK_N
MIPI_RX_LP_CLK_P
MIPI_RX_LP_D0_N
MIPI_RX_LP_D0_P
MIPI_RX_LP_D1_N
MIPI_RX_LP_D1_P
MIPI_RX_D0_N
MIPI_RX_D0_P
MIPI_SCLK
MIPI_SDAT
B33_L16_N
B33_L16_P
B33_L9_N
B33_L9_P
B33_L6_N
B33_L6_P
B33_L4_N
B33_L4_P
PL_ENET1_TX_DATA3
PL_ENET1_TX_DATA2
B33_L1_N
B33_L1_P
B33_L2_N
B33_L2_P
TP_RST
LCD_BL
PS2_DATA
PS2_CLK
PL_UART_TXD
PL_UART_RXD
FPGA_KEY1
FPGA_KEY0
SW7
SW6
SW5
SW4
SW3
SW2
SW1
SW0
PL_I2C_SDA
PL_I2C_SCL
VCCIO34
VCC5P0
P16
FPGA_TCK
FPGA_TDO
FPGA_TMS
FPGA_TDI
R204
4.7K
EX_JTAG_detect
VCC3P3
IDCBox2X5_2_54MM
JATG
D24
D25
D26
D27
武汉芯路恒科技有限公司
Title
AC850-CB
Size
A3
File
01_CONNECTOR
Version
V1.0
Date:
Thursday, July 24, 2025
Sheet
1
of
16

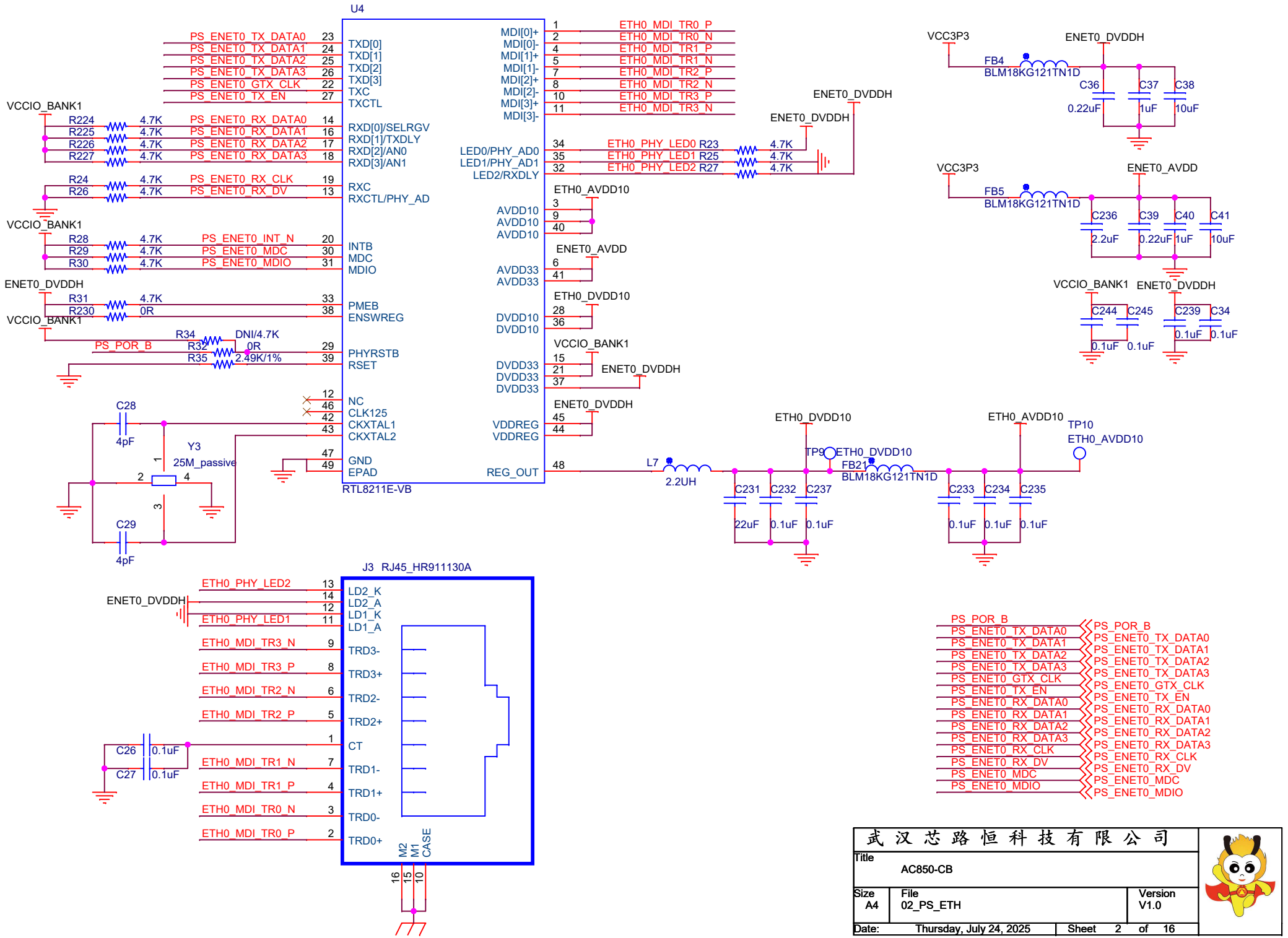

武汉芯路恒科技有限公司		
Title: AC850-CB		
Size: A4	File: 02_PS_ETH	Version: V1.0
Date: Thursday, July 24, 2025	Sheet 2 of 16	

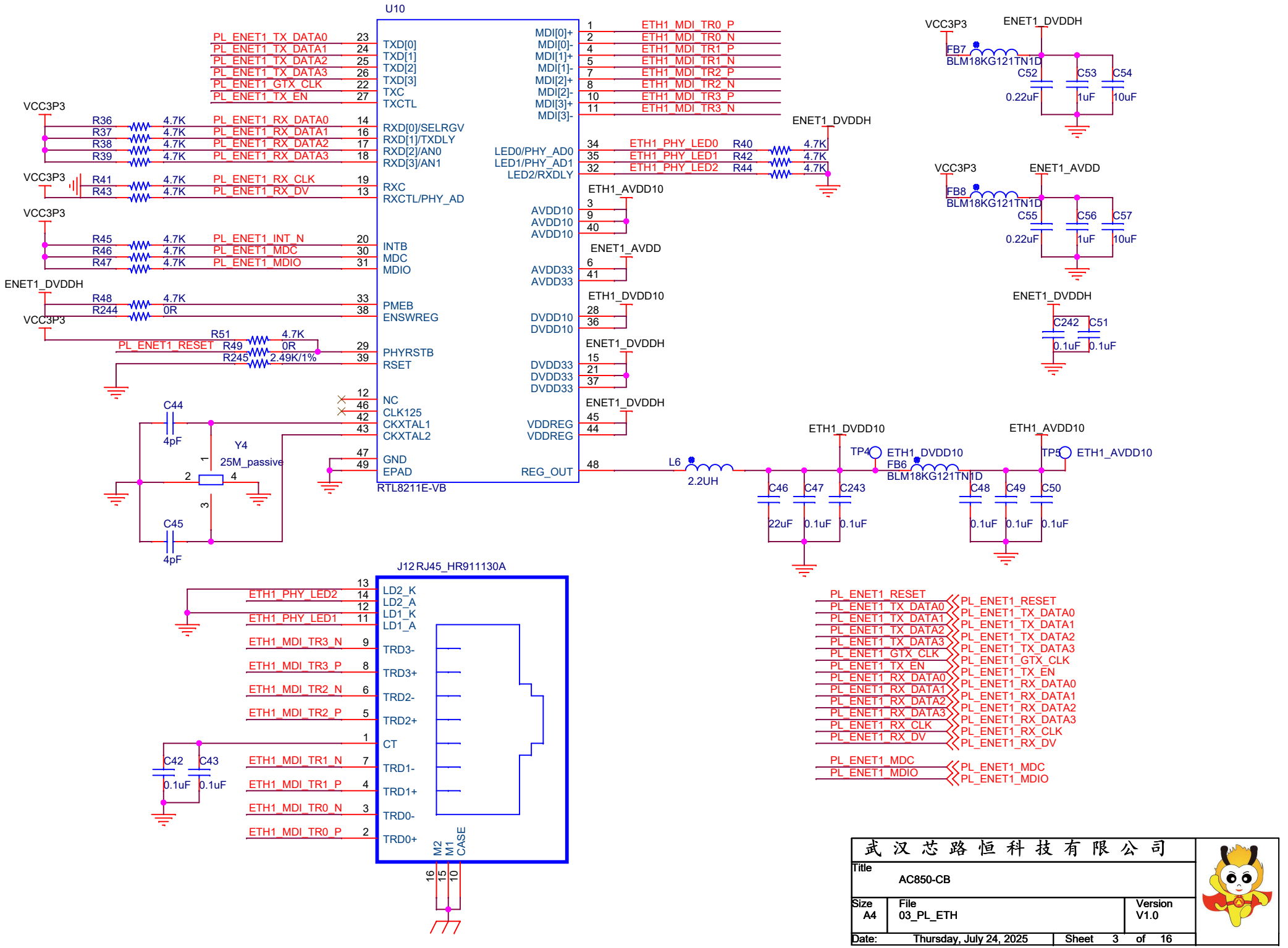

武汉芯路恒科技有限公司		
Title: AC850-CB		
Size: A4	File: 03_PL_ETH	Version: V1.0
Date: Thursday, July 24, 2025	Sheet 3 of 16	

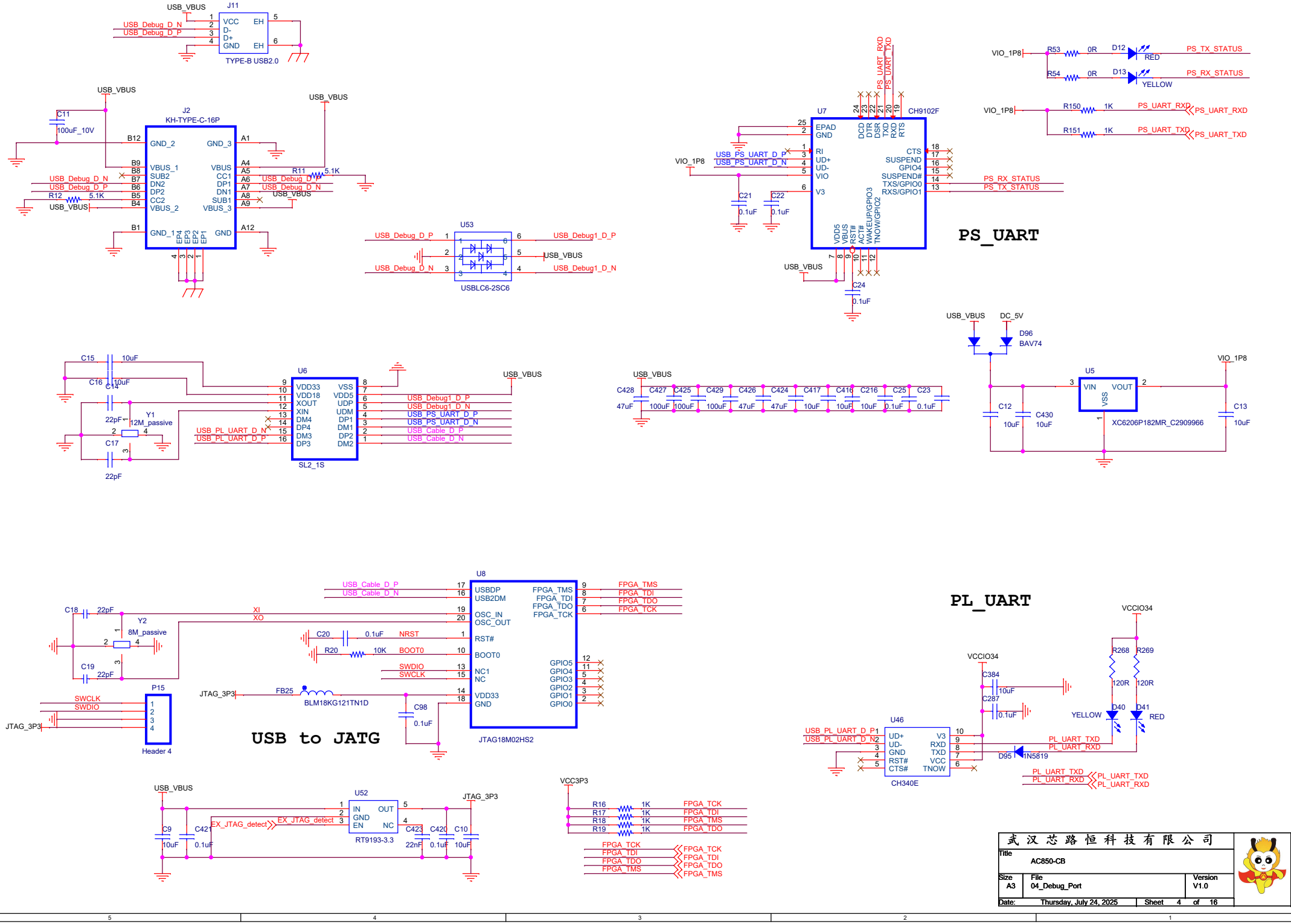
USB_VBUS
J11
USB_Debug_D_N
USB_Debug_D_P
VCC
D-
D+
GND
EH
TYPE-B USB2.0
J2
KH-TYPE-C-16P
C11
100uF_10V
R11
5.1K
R12
5.1K
U53
USBLC6-2SC6
USB_Debug1_D_P
USB_Debug1_D_N
U7
CH9102F
EPAD
GND
USB_PS_UART_D_P
USB_PS_UART_D_N
VIO_1P8
C21
C22
0.1uF
PS_UART_RXD
PS_UART_TXD
PS_TX_STATUS
PS_RX_STATUS
R53
R54
R150
R151
0R
1K
D12
D13
RED
YELLOW
PS_UART
U6
SL2_1S
USB_PL_UART_D_N
USB_PL_UART_D_P
USB_Cable_D_P
USB_Cable_D_N
Y1
12M_passive
C15
C16
C14
C17
22pF
10uF
U8
JTAG18M02HS2
USBDP
USB2DM
OSC_IN
OSC_OUT
RST#
BOOT0
NC1
NC
VDD33
GND
FPGA_TMS
FPGA_TDI
FPGA_TDO
FPGA_TCK
GPIO5
GPIO4
GPIO3
GPIO2
GPIO1
GPIO0
Y2
8M_passive
C18
C19
C20
R20
NRST
BOOT0
SWDIO
SWCLK
XI
XO
FB25
BLM18KG121TN1D
C98
P15
Header 4
JTAG_3P3
USB to JATG
U52
RT9193-3.3
EX_JTAG_detect
C9
C421
C423
C420
C10
22nF
VCC3P3
R16
R17
R18
R19
1K
U5
XC6206P182MR_C2909966
VIN
VOUT
VSS
C12
C430
C13
D96
BAV74
DC_5V
C428
C427
C425
C429
C426
C424
C417
C416
C216
C25
C23
47uF
100uF
PL_UART
U46
CH340E
UD+
UD-
GND
RST#
CTS#
V3
RXD
TXD
VCC
TNOW
D95
1N5819
C384
C287
R268
R269
120R
D40
D41
VCCIO34
PL_UART_TXD
PL_UART_RXD
武汉芯路恒科技有限公司
Title
AC850-CB
Size
A3
File
04_Debug_Port
Version
V1.0
Date:
Thursday, July 24, 2025
Sheet
4
of
16

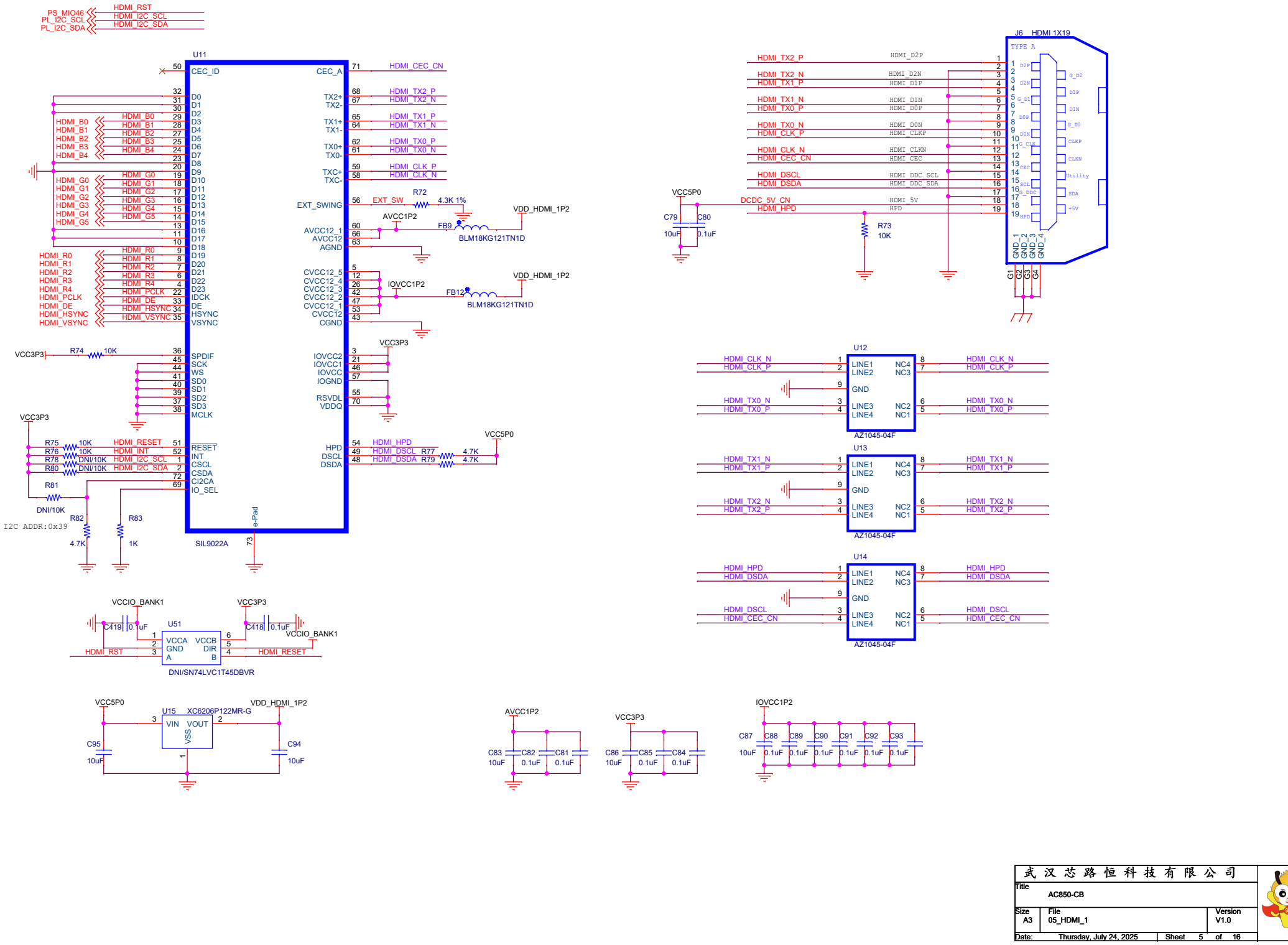

武汉芯路恒科技有限公司		
Title: AC850-CB		
Size: A3	File: 05_HDMI_1	Version: V1.0
Date: Thursday, July 24, 2025	Sheet 5 of 16	

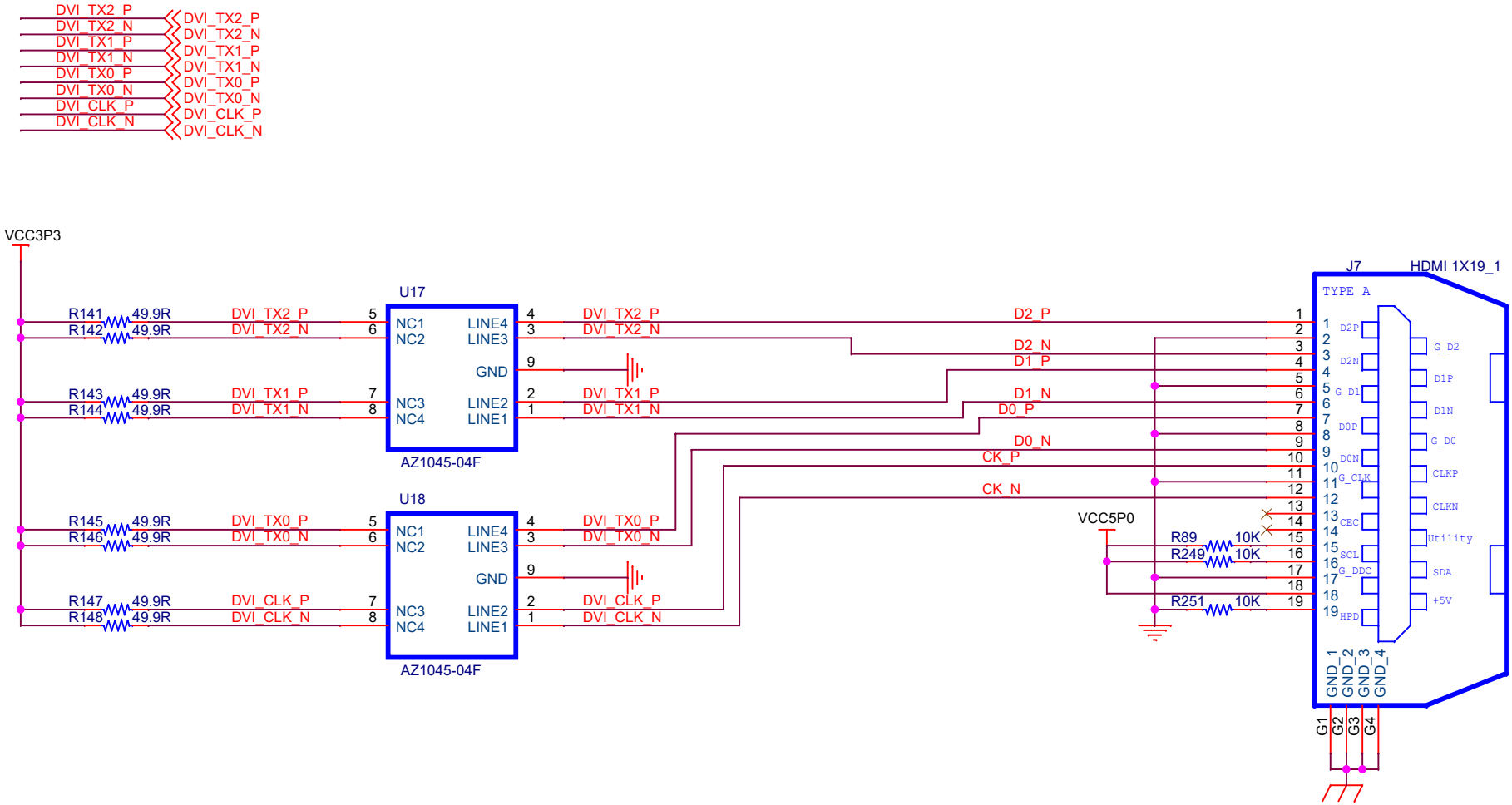

武汉芯路恒科技有限公司		
Title: AC850-CB		
Size: A4	File: 06_HDMI_2	Version: V1.0
Date: Thursday, July 24, 2025	Sheet 6 of 16	

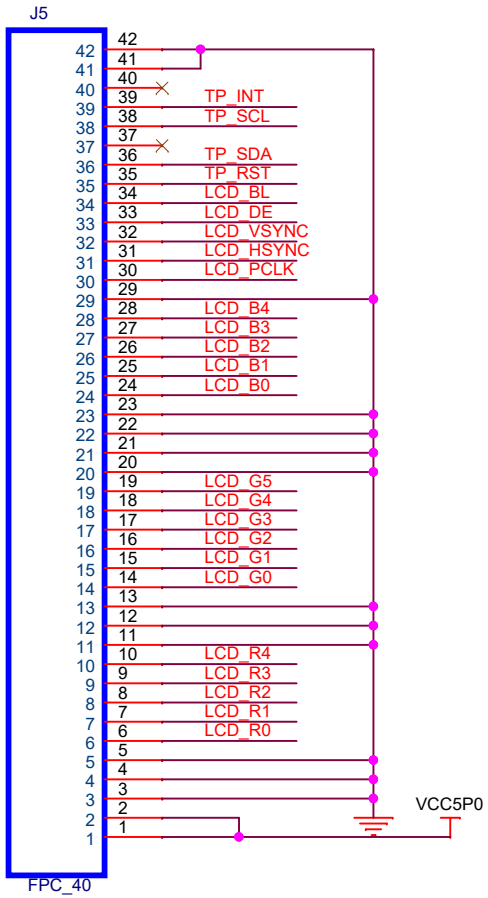

翻盖下接40P 0.5mm
FPC排线座

LCD

CMOS

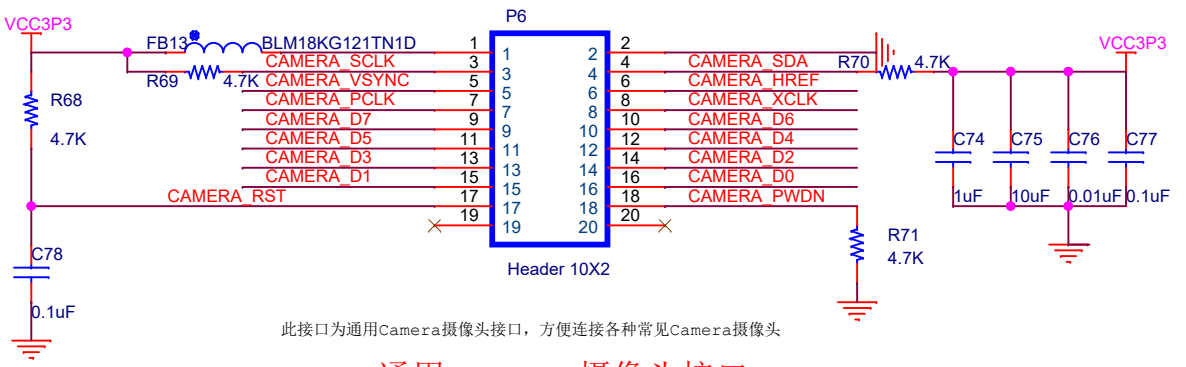

此接口为通用Camera摄像头接口，方便连接各种常见Camera摄像头

通用Camera摄像头接口

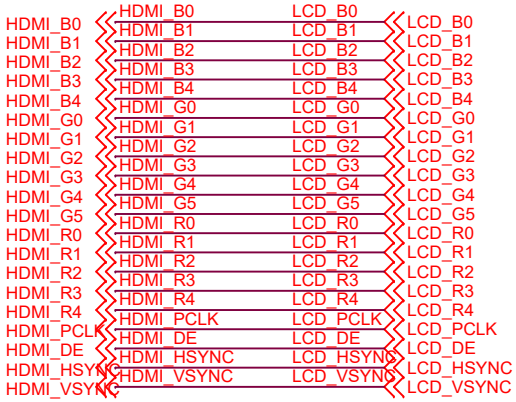

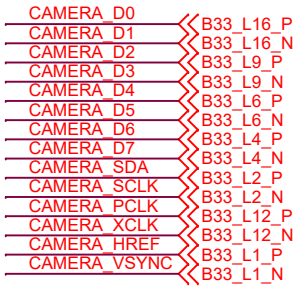

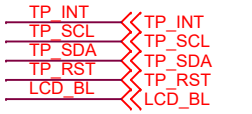

武汉芯路恒科技有限公司		
Title: AC850-CB		
Size: A4	File: 07_LCD&CMOS	Version: V1.0
Date: Thursday, July 24, 2025	Sheet 7 of 16	

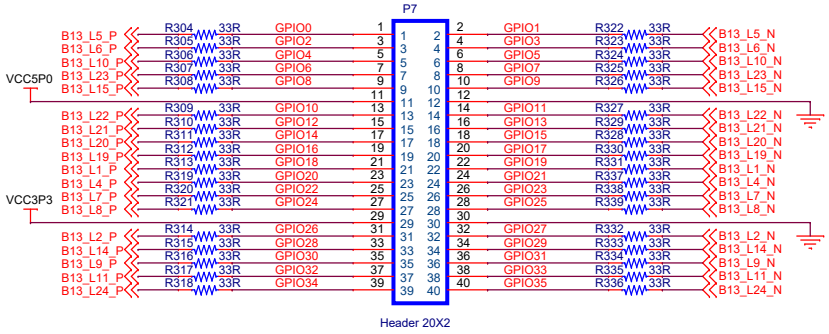

此接口为通用标准扩展接口，兼容友晶DE2开发板扩展口

兼容DE2的通用扩展接口

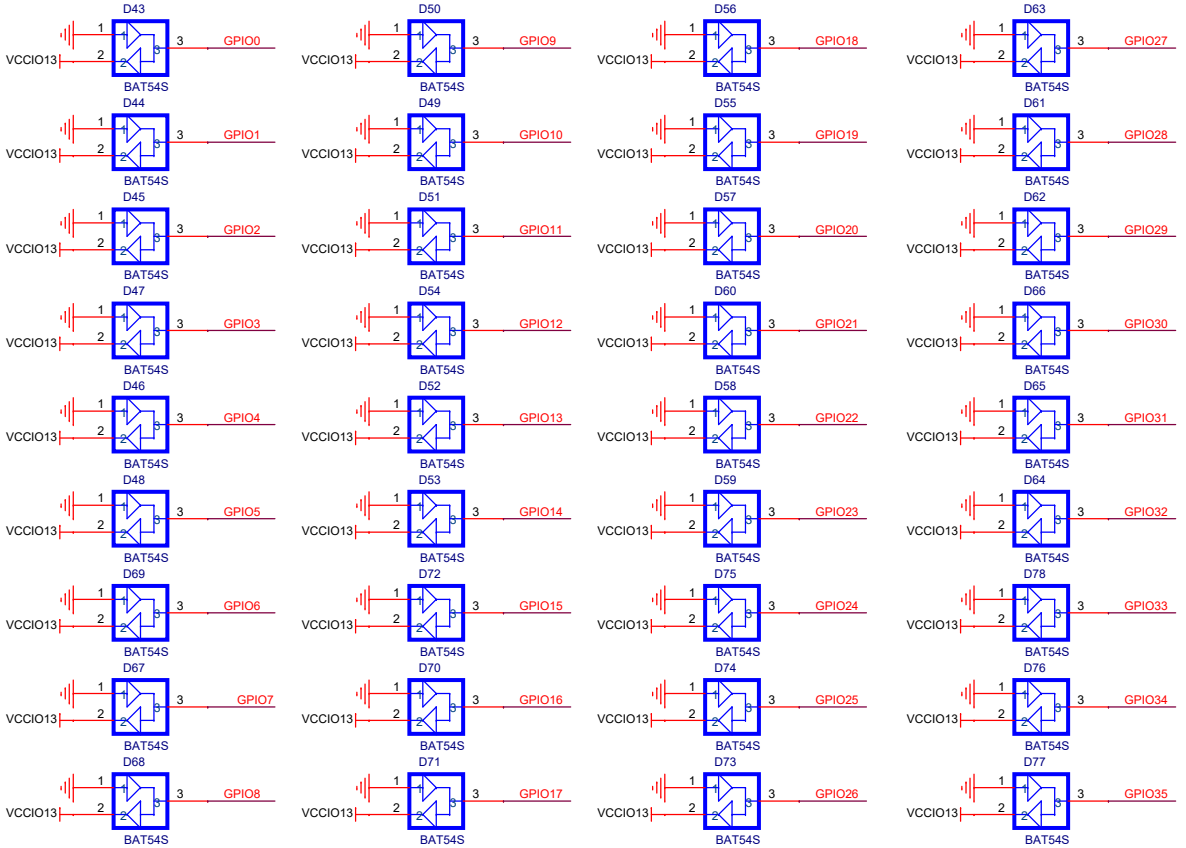

武汉芯路恒科技有限公司			
Title: AC850-CB			
Size: A3	File: 08_GPIO		Version: V1.0
Date: Thursday, July 24, 2025		Sheet 8 of 16	

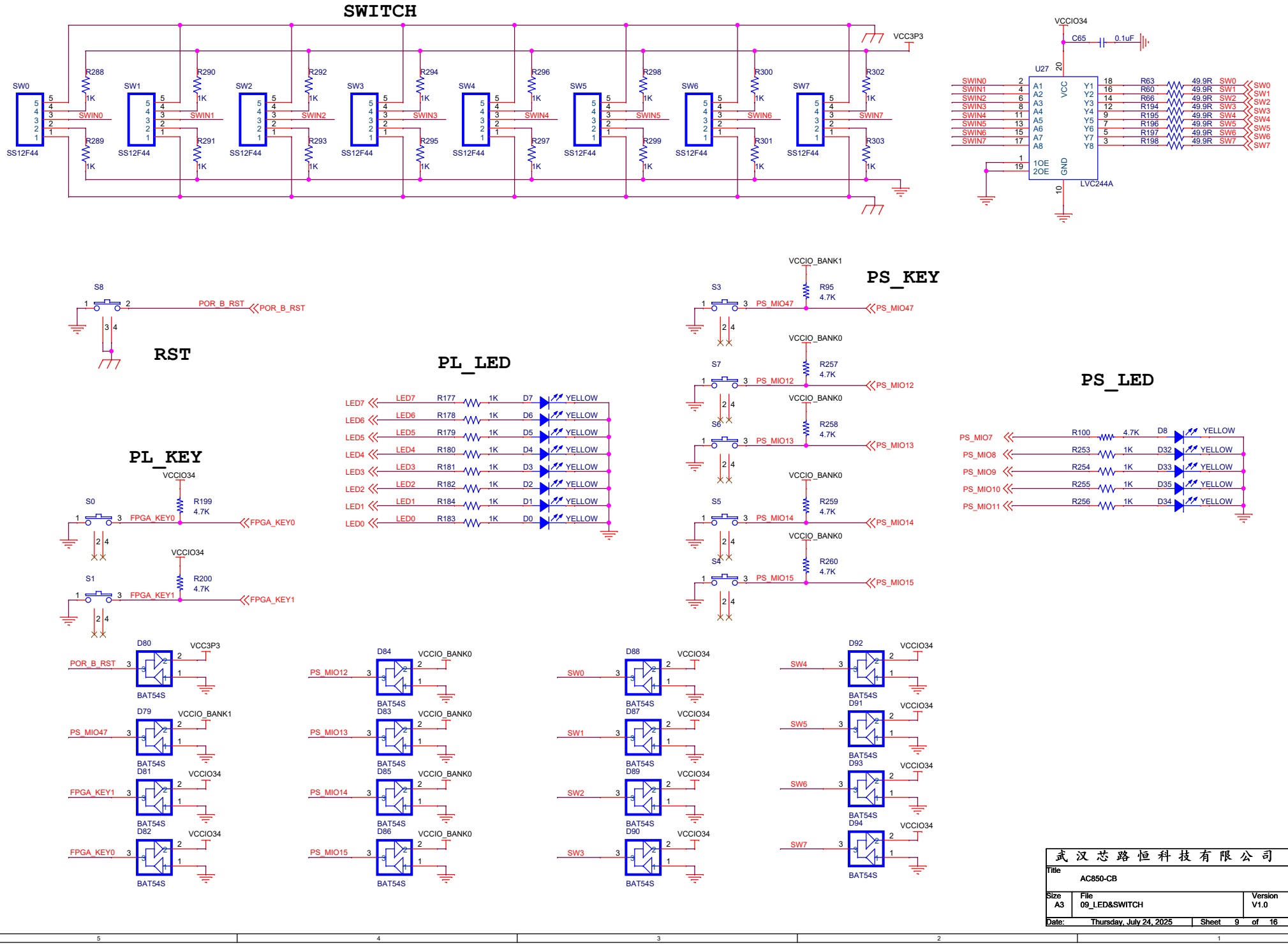

武汉芯路恒科技有限公司			
Title: AC850-CB			
Size: A3	File: 09_LED&SWITCH		Version: V1.0
Date: Thursday, July 24, 2025	Sheet 9 of 16		

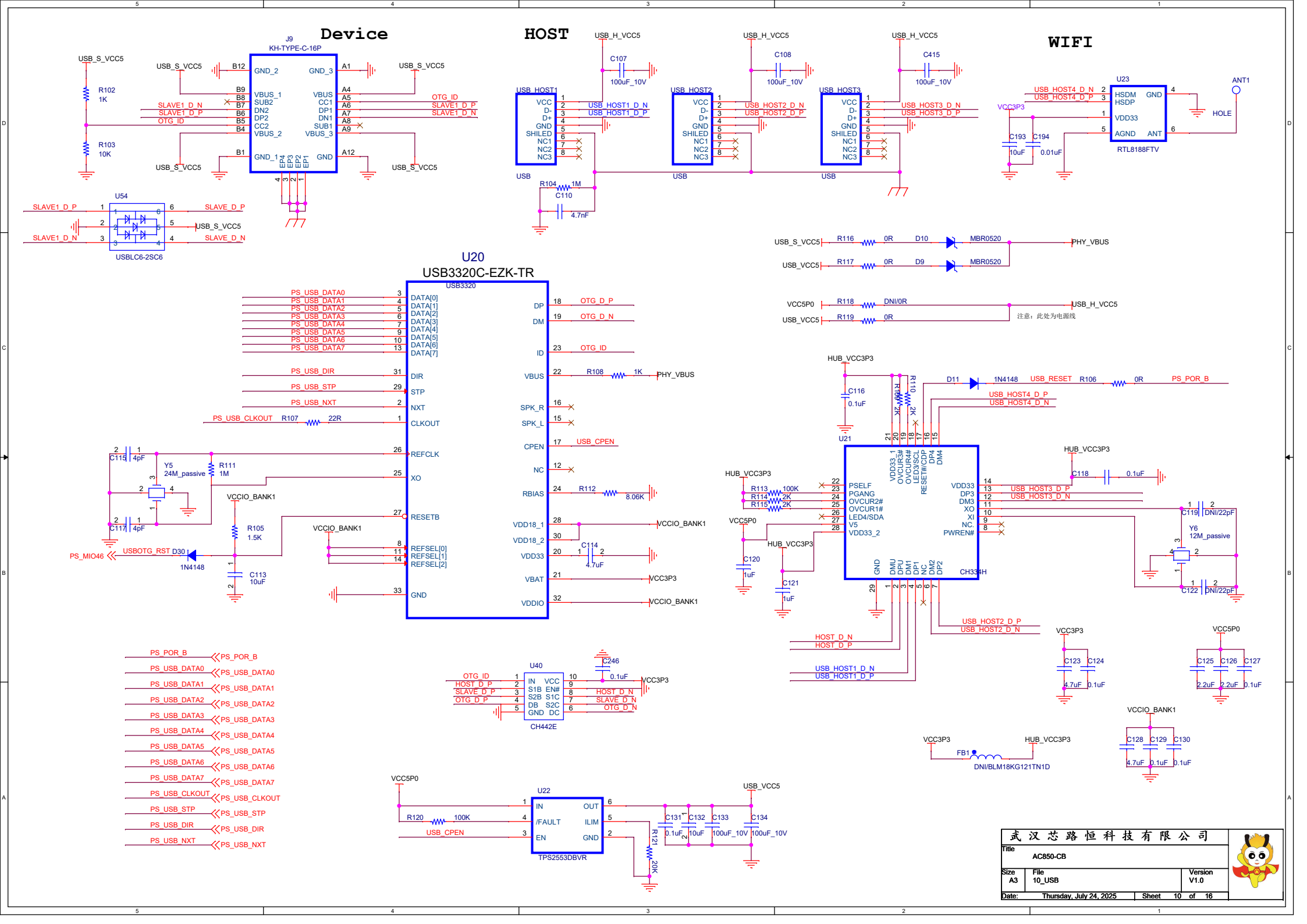
Device
HOST
WIFI
J9
KH-TYPE-C-16P
U54
USBLC6-2SC6
U20
USB3320C-EZK-TR
USB3320
U23
RTL8188FTV
U21
CH334H
U40
CH442E
U22
TPS2553DBVR
Y5
24M_passive
Y6
12M_passive
FB1
DNI/BLM18KG121TN1D
注意：此处为电源线
武汉芯路恒科技有限公司
Title
AC850-CB
Size
A3
File
10_USB
Version
V1.0
Date:
Thursday, July 24, 2025
Sheet
10
of
16

音频编解码器

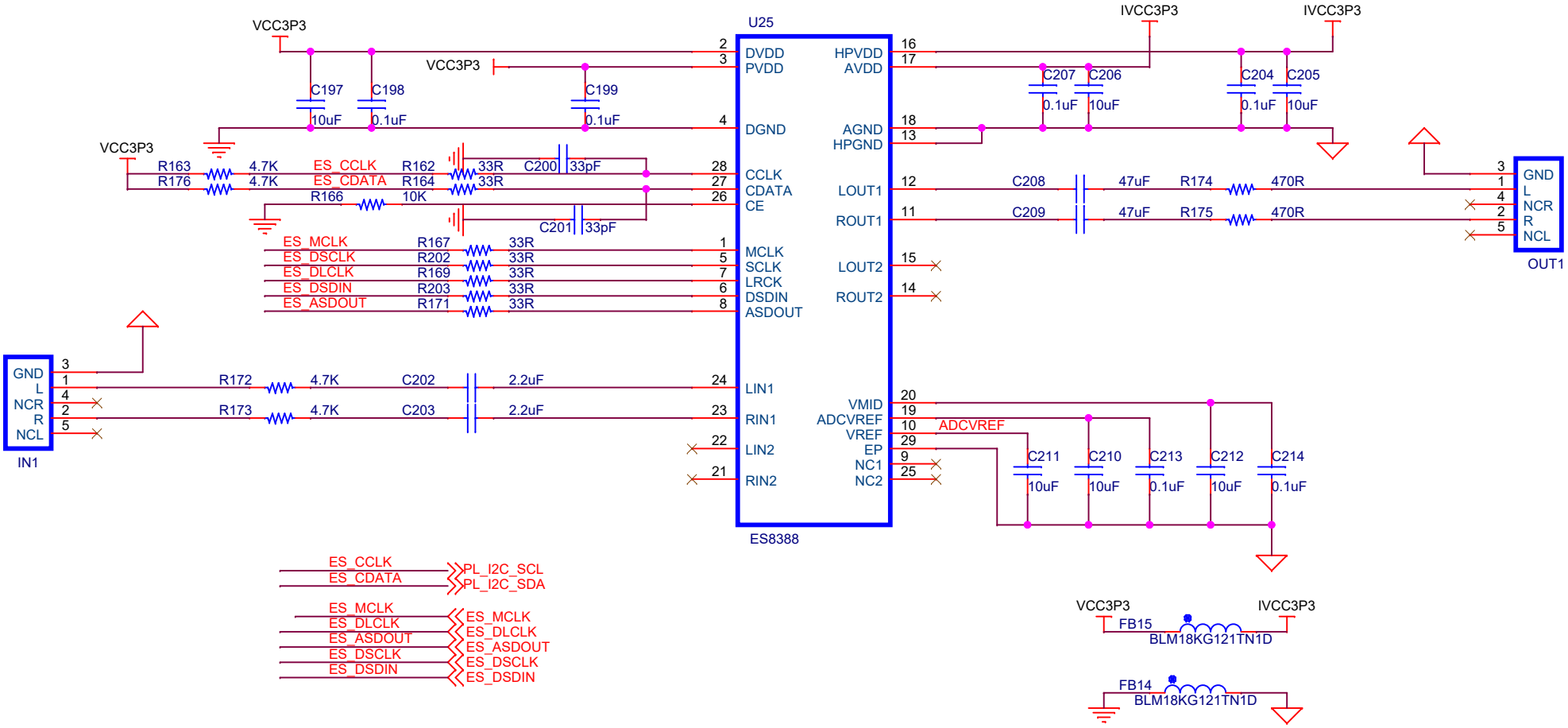

武汉芯路恒科技有限公司		
Title: AC850-CB		
Size: A4	File: 11_Audio	Version: V1.0
Date: Thursday, July 24, 2025	Sheet 11 of 16	

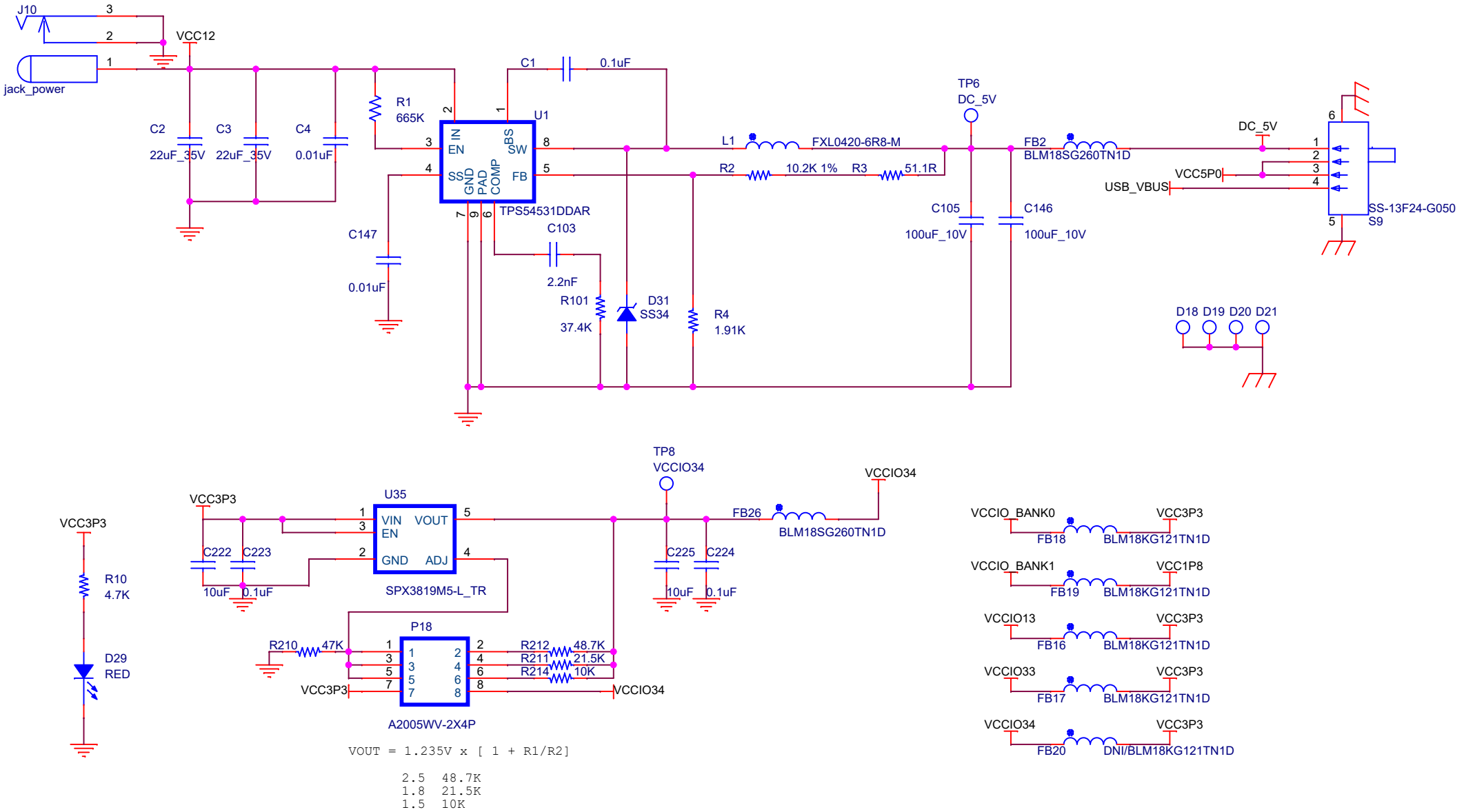

VOUT = 1.235V x [1 + R1/R2]

2.5	48.7K
1.8	21.5K
1.5	10K

武汉芯路恒科技有限公司		
Title: AC850-CB		
Size: A4	File: 12_POWER	Version: V1.0
Date: Thursday, July 24, 2025	Sheet 12 of 16	

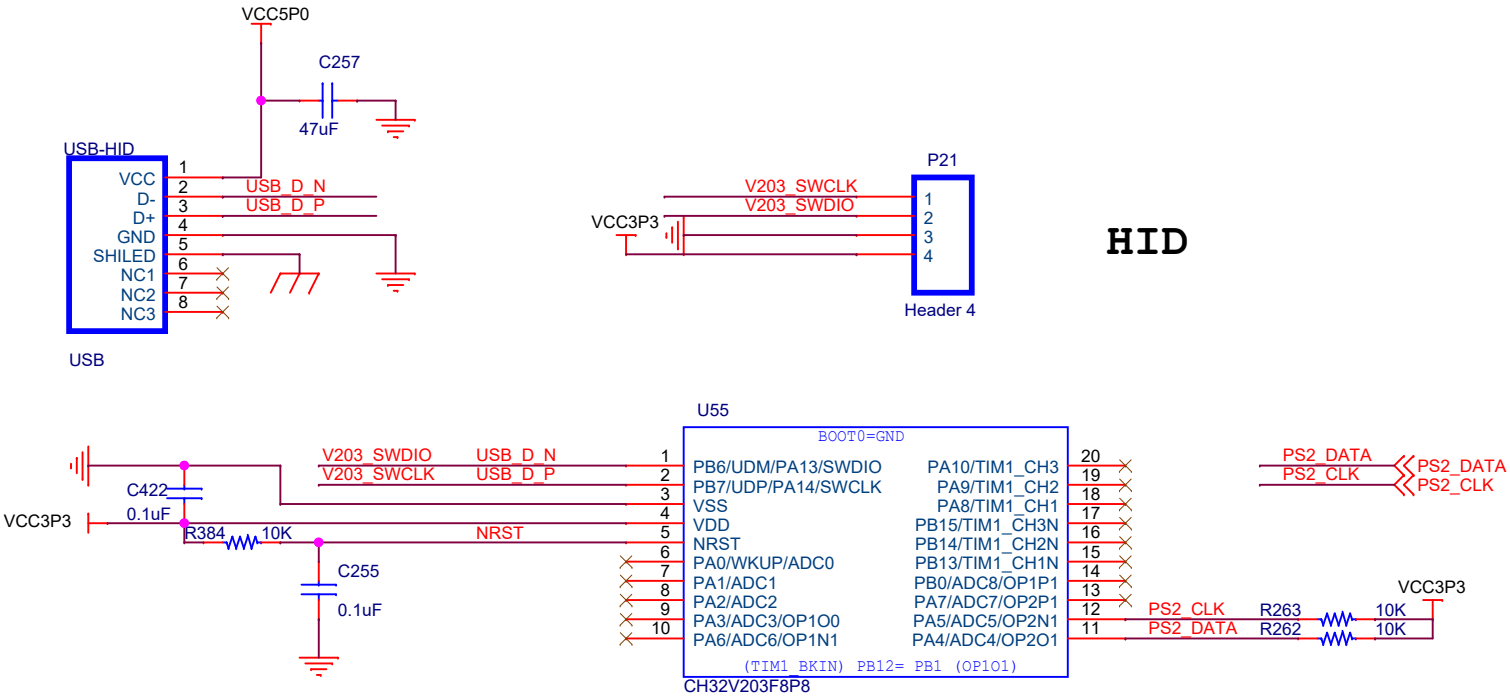

武汉芯路恒科技有限公司		
Title: AC850-CB		
Size: A4	File: 13_HID\SD\BEEP	Version: V1.0
Date: Thursday, July 24, 2025	Sheet 13 of 16	

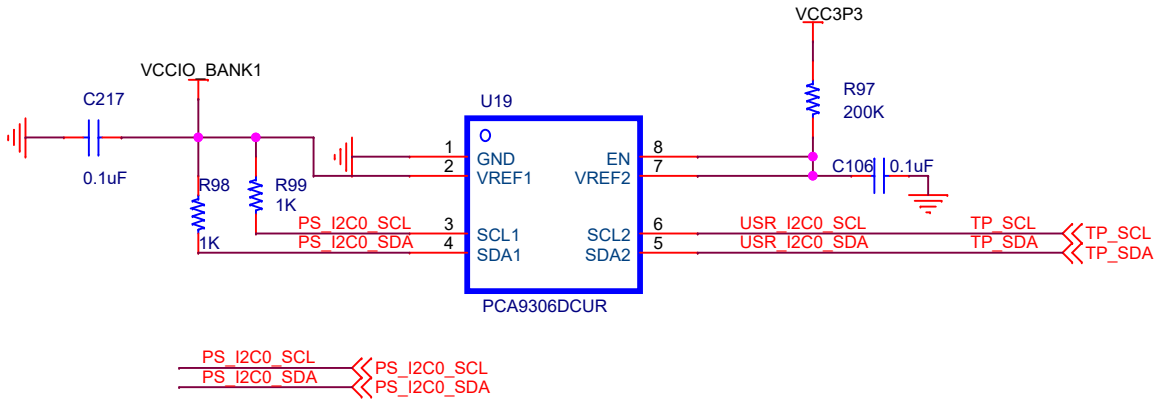

BOOT

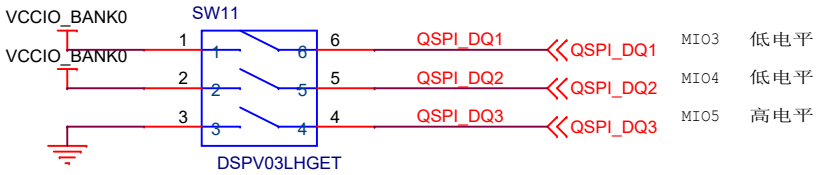

启动模式	MIO5	MIO4	MIO3	
JTAG	0	0	0	
QSPI	1	0	0	默认启动模式
SD Card	1	1	0	

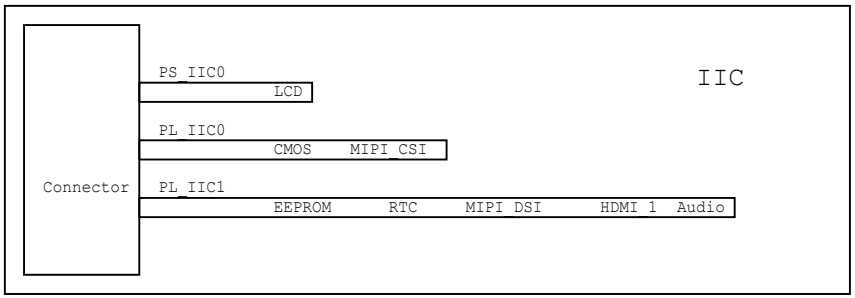

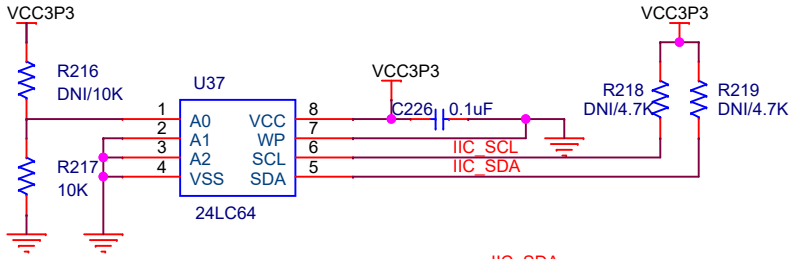

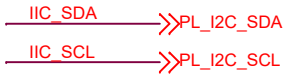

EEPROM

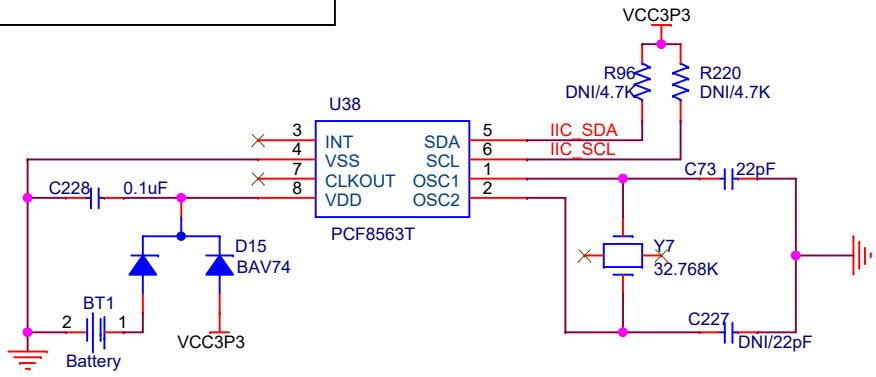

RTC

武汉芯路恒科技有限公司			
Title: AC850-CB			
Size: A4	File: 14_I2C\BOOT		Version: V1.0
Date: Thursday, July 24, 2025		Sheet 14 of 16	

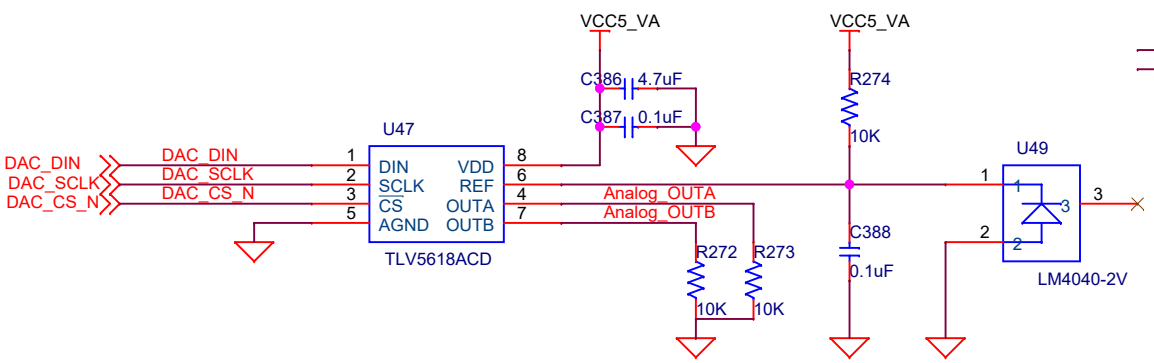

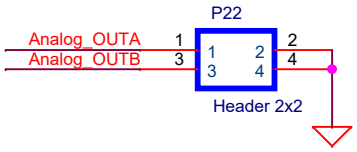

DAC

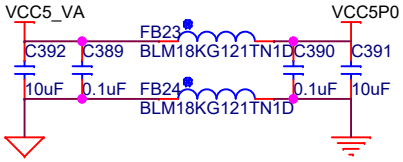

ADC

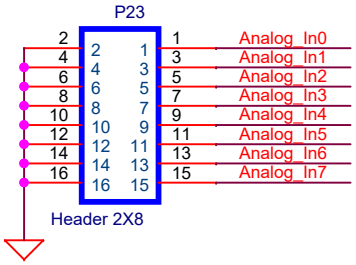

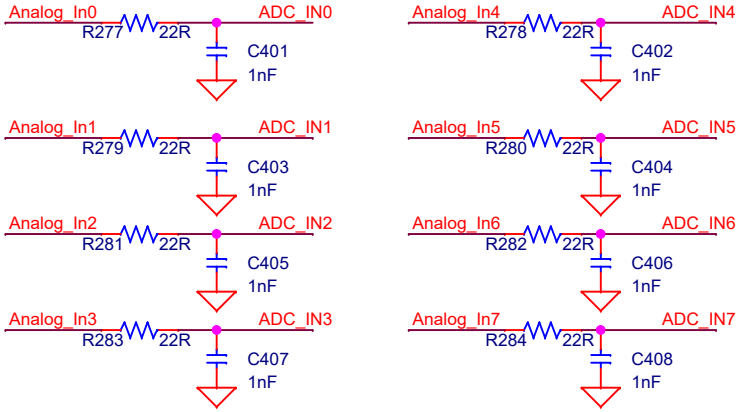

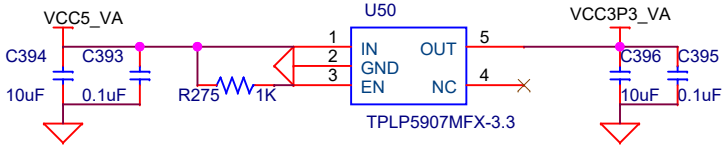

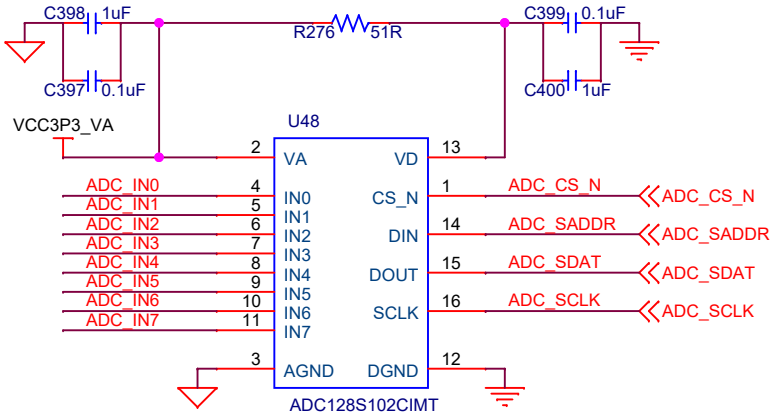

武汉芯路恒科技有限公司		
Title: AC850-CB		
Size: A4	File: 15_ADDA	Version: V1.0
Date: Thursday, July 24, 2025	Sheet 15 of 16	

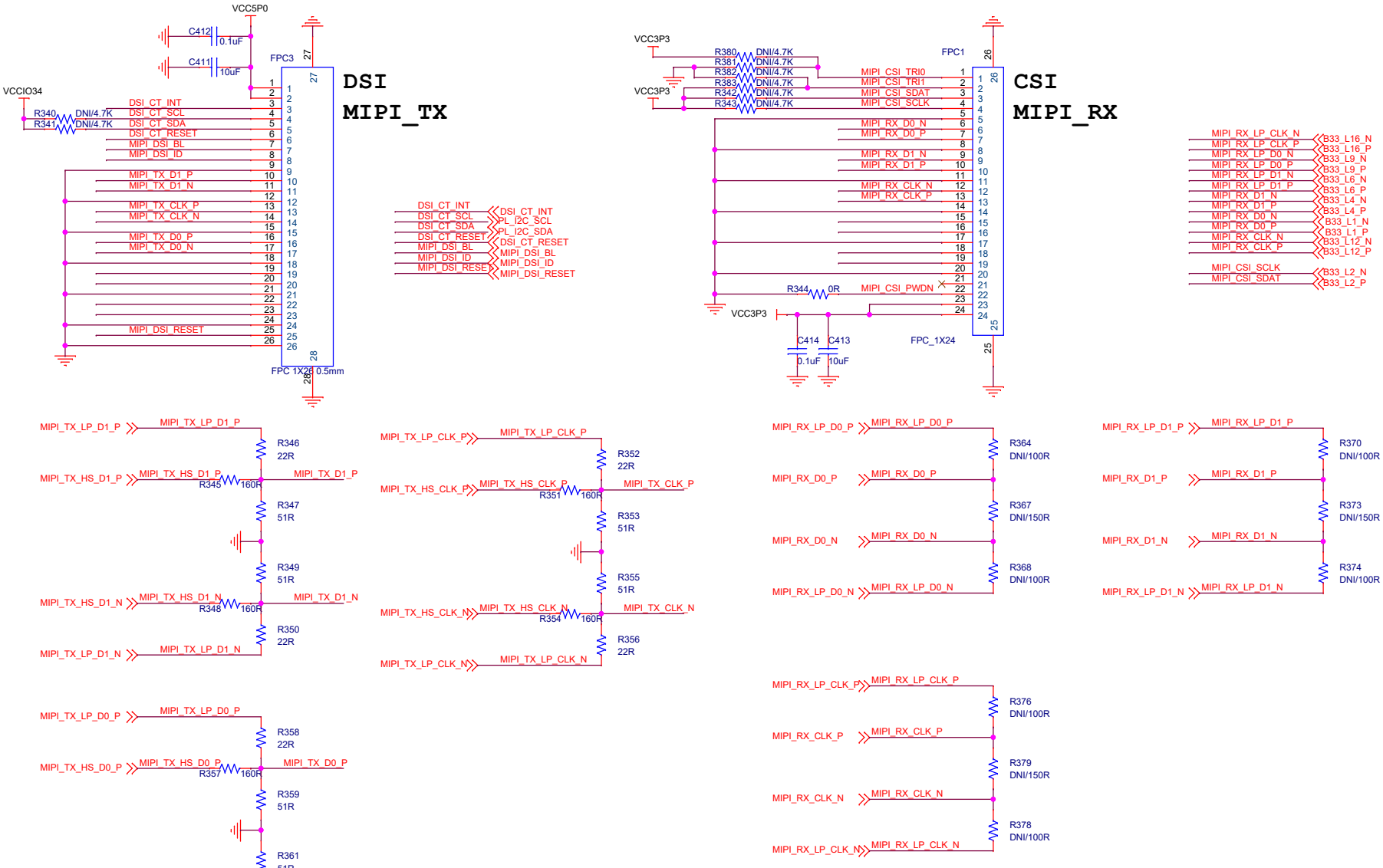

武汉芯路恒科技有限公司		
Title: AC850-CB		
Size: A3	File: 16_MIPI	Version: V1.0
Date: Thursday, July 24, 2025	Sheet 16 of 16	