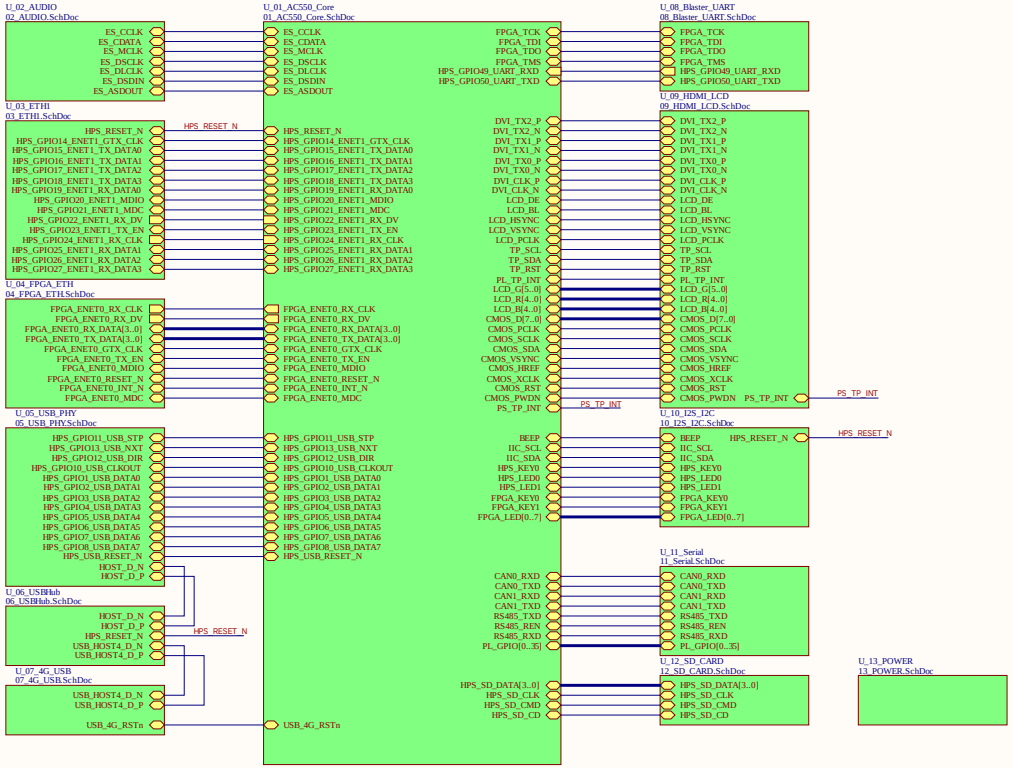

Title		
Size: A2	Number	Revision
Date: 11-01-2024	Sheet of	
File: E:\小梅哥FPGA同步空间\...\00_AC550-Bottom.SchDoc	Drawn By:	

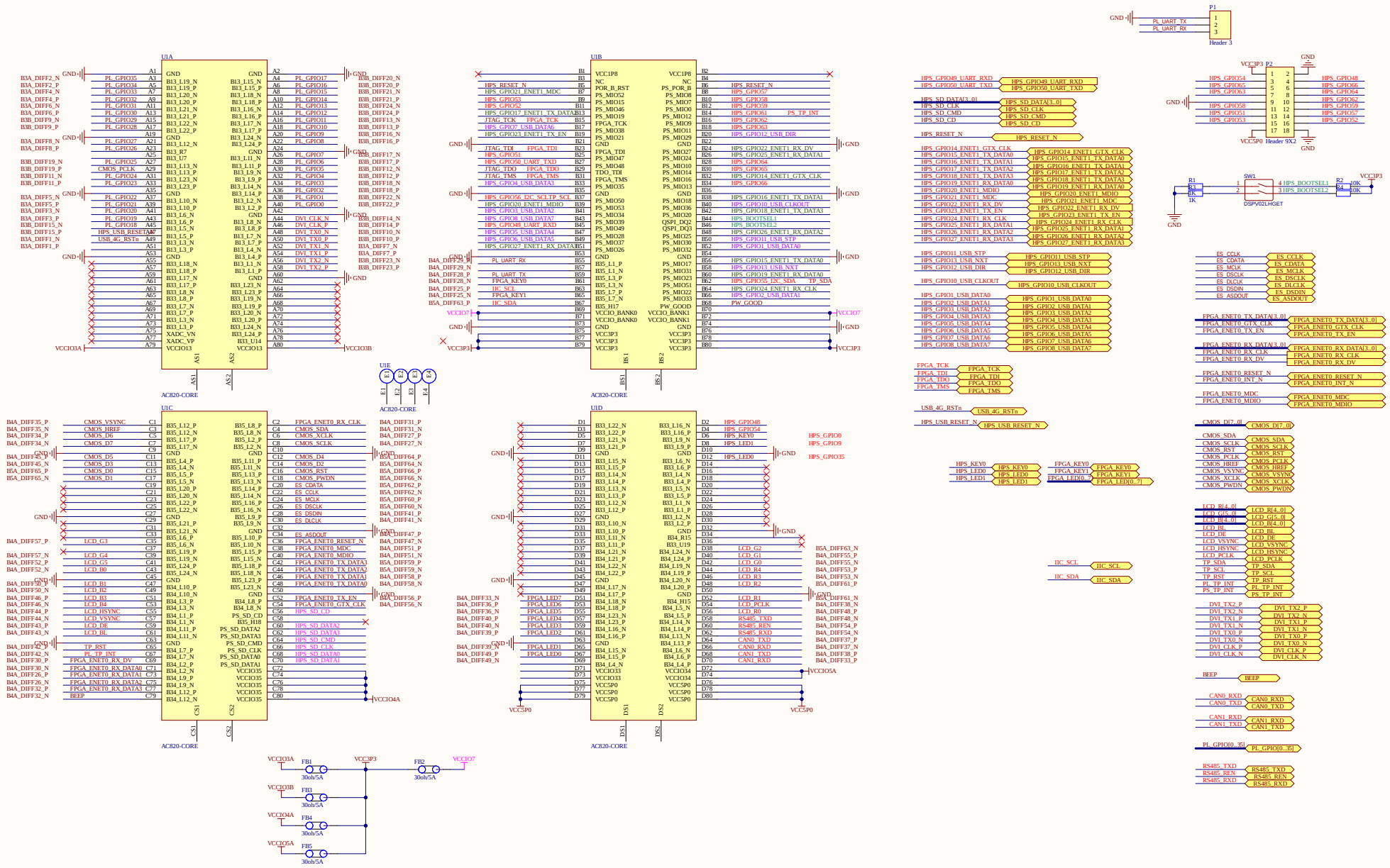
U1A
U1B
U1C
U1D
U1E
AC820-CORE
P1
Header 3
P2
Header 9X2
SW1
DSPV02LHGET
FB1
FB2
FB3
FB4
FB5
30oh/5A

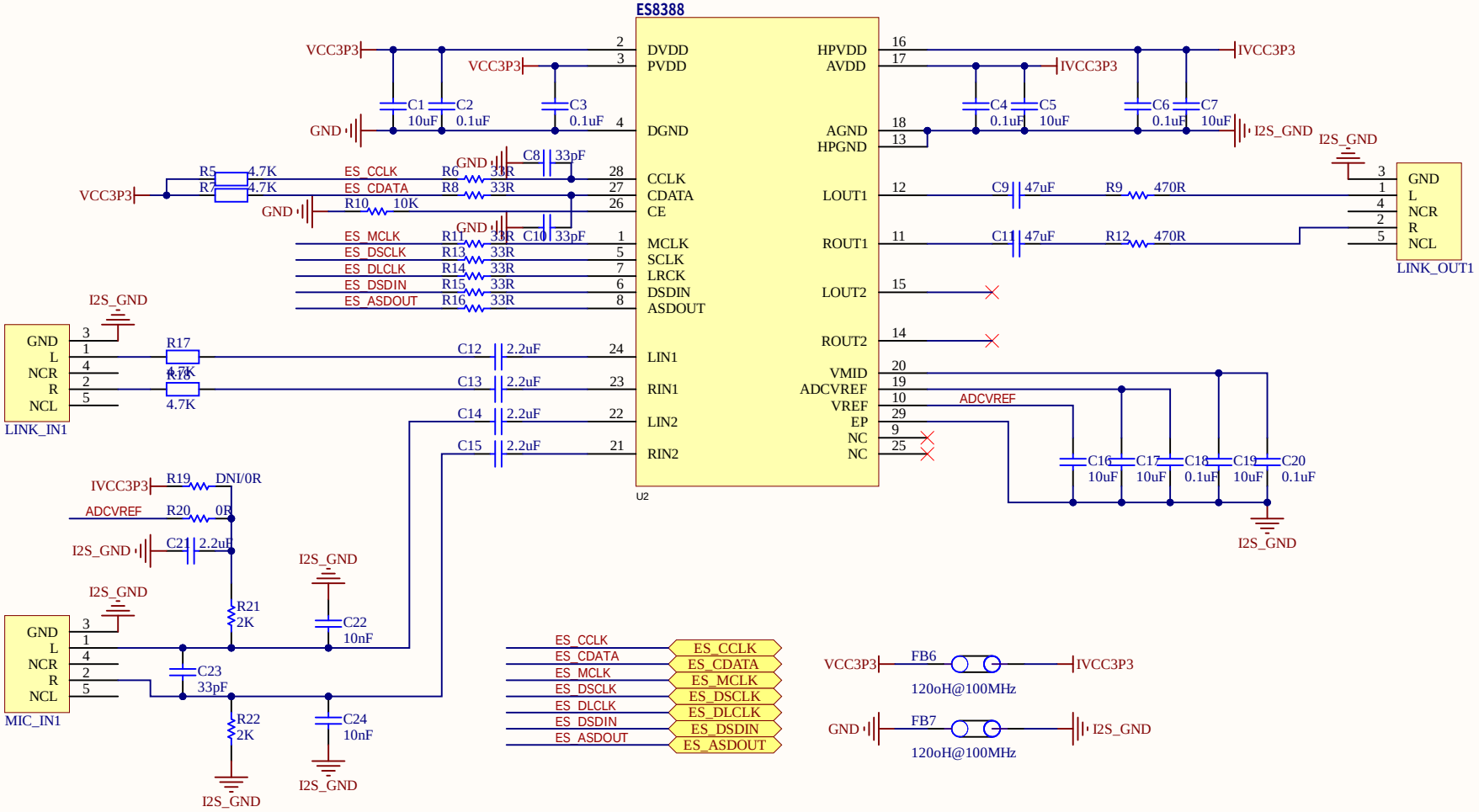
ES8388
U2
DVDD
PVDD
DGND
CCLK
CDATA
CE
MCLK
SCLK
LRCK
DSDIN
ASDOUT
LIN1
RIN1
LIN2
RIN2
HPVDD
AVDD
AGND
HPGND
LOUT1
ROUT1
LOUT2
ROUT2
VMID
ADCVREF
VREF
EP
NC
NC
VCC3P3
IVCC3P3
GND
I2S_GND
ADCVREF
ES_CCLK
ES_CDATA
ES_MCLK
ES_DSCLK
ES_DLCLK
ES_DSDIN
ES_ASDOUT
LINK_OUT1
LINK_IN1
MIC_IN1
FB6
FB7
120oH@100MHz
DNI/0R
0R
Title
Size
A4
Number
Revision
Date:
11-01-2024
Sheet of
File:
E:\小梅哥FPGA同步空间\..\02_AUDIO\Schdoc
Drawn By:

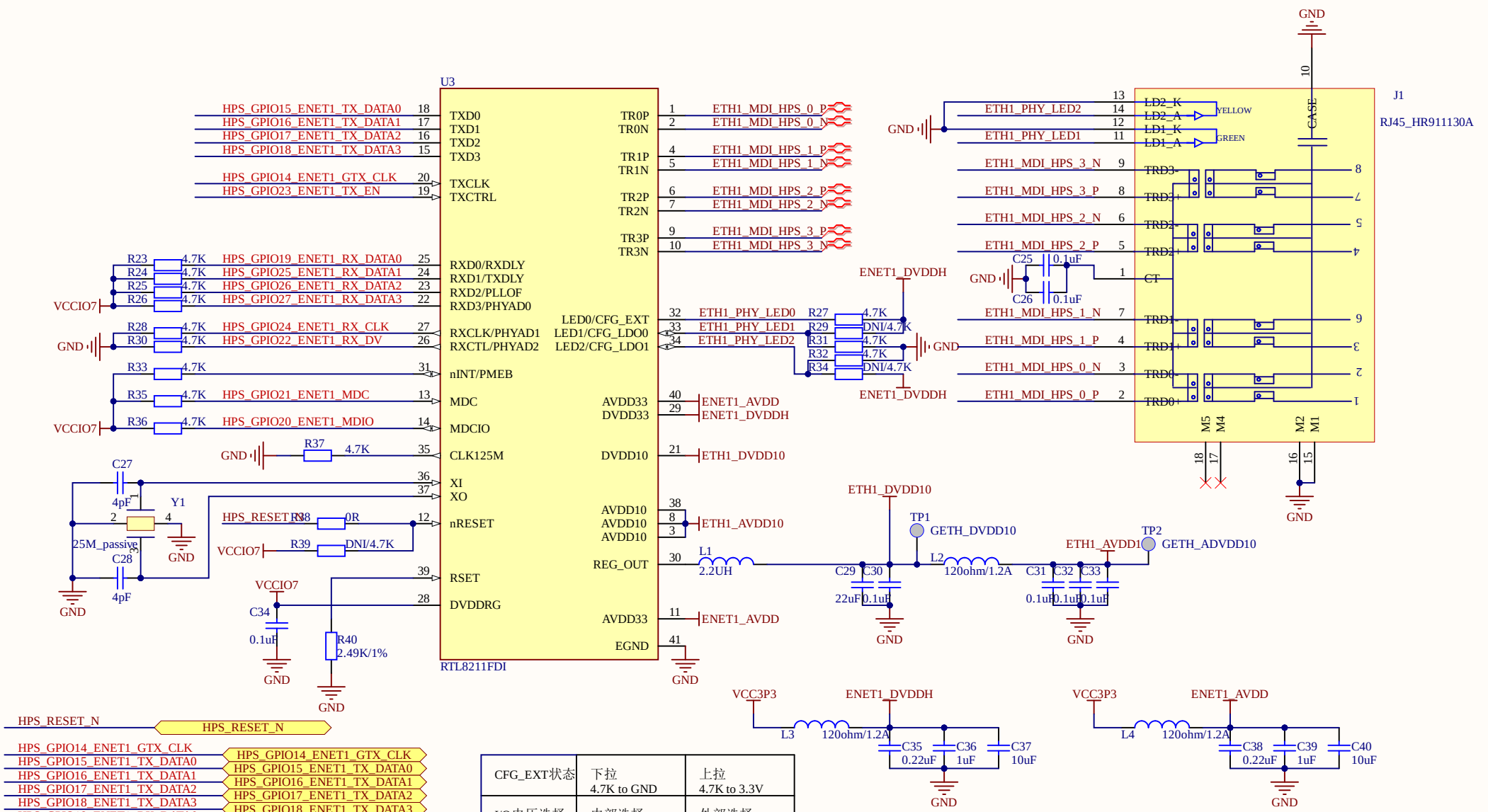

CFG_EXT状态	下拉 4.7K to GND	上拉 4.7K to 3.3V
I/O电压选择	内部选择	外部选择
I/O电压设置	CFG_LDO[1:0] 00：Reserved 01：2.5V 10：1.8V 11：1.5V	CFG_LDO[1:0] 00：3.3V 01：2.5V 10：1.8V 11：1.5V

Title		
Size A4	Number	Revision
Date: 11-01-2024	Sheet of	
File: E:\小梅哥FPGA同步空间\..\03_ETH1.SchDoc	Drawn By:	

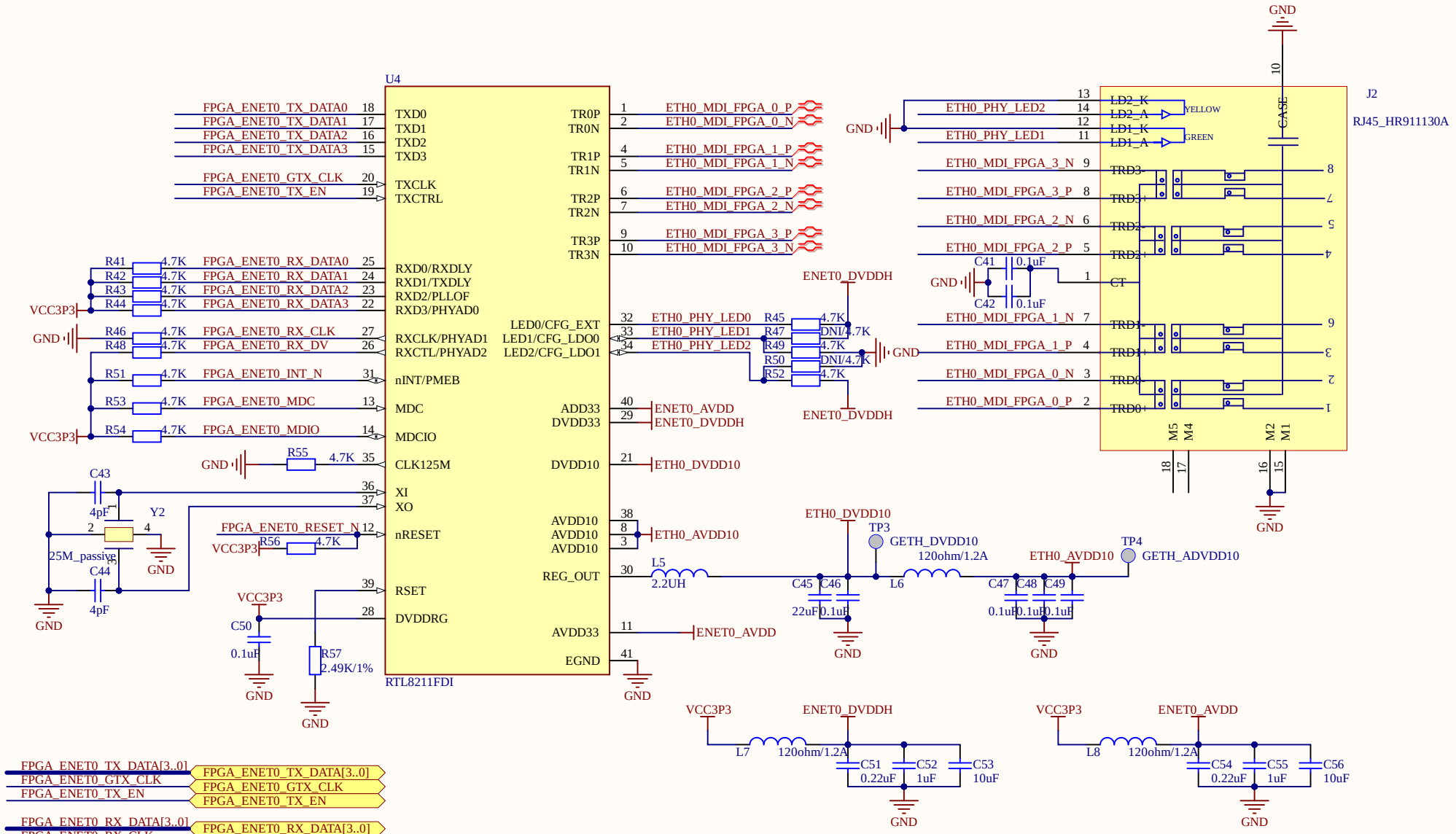

Title		
Size A4	Number	Revision
Date: 11-01-2024	Sheet of	
File: E:\小梅哥FPGA同步空间\..\04_FPGA_ETH\Sch.SchDoc	Drawn By:	

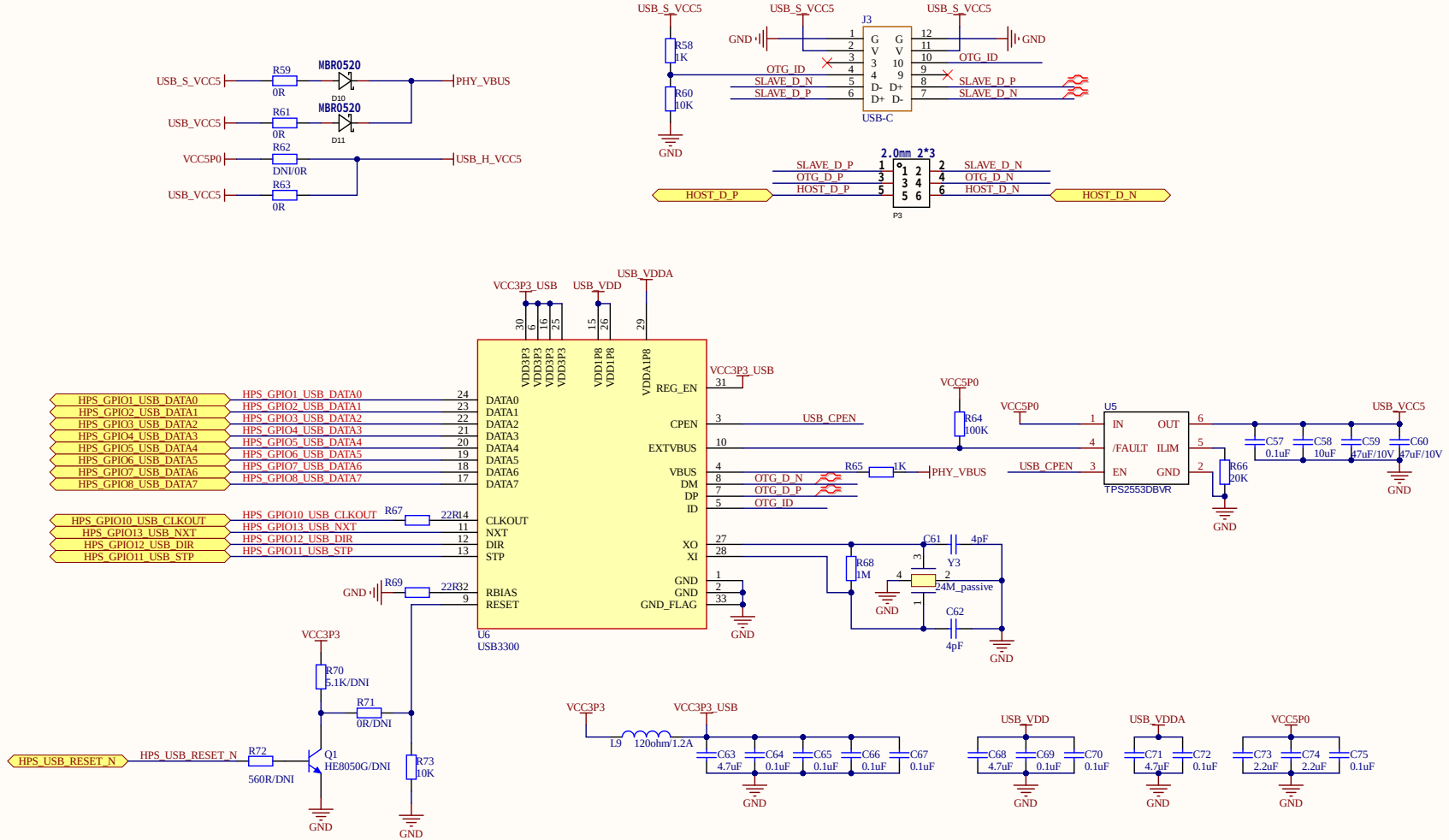

Title		
Size: A3	Number	Revision
Date: 11-01-2024	Sheet of	
File: E:\小梅哥FPGA同步空间\..\05_USB_HDL\Sch\Doc		

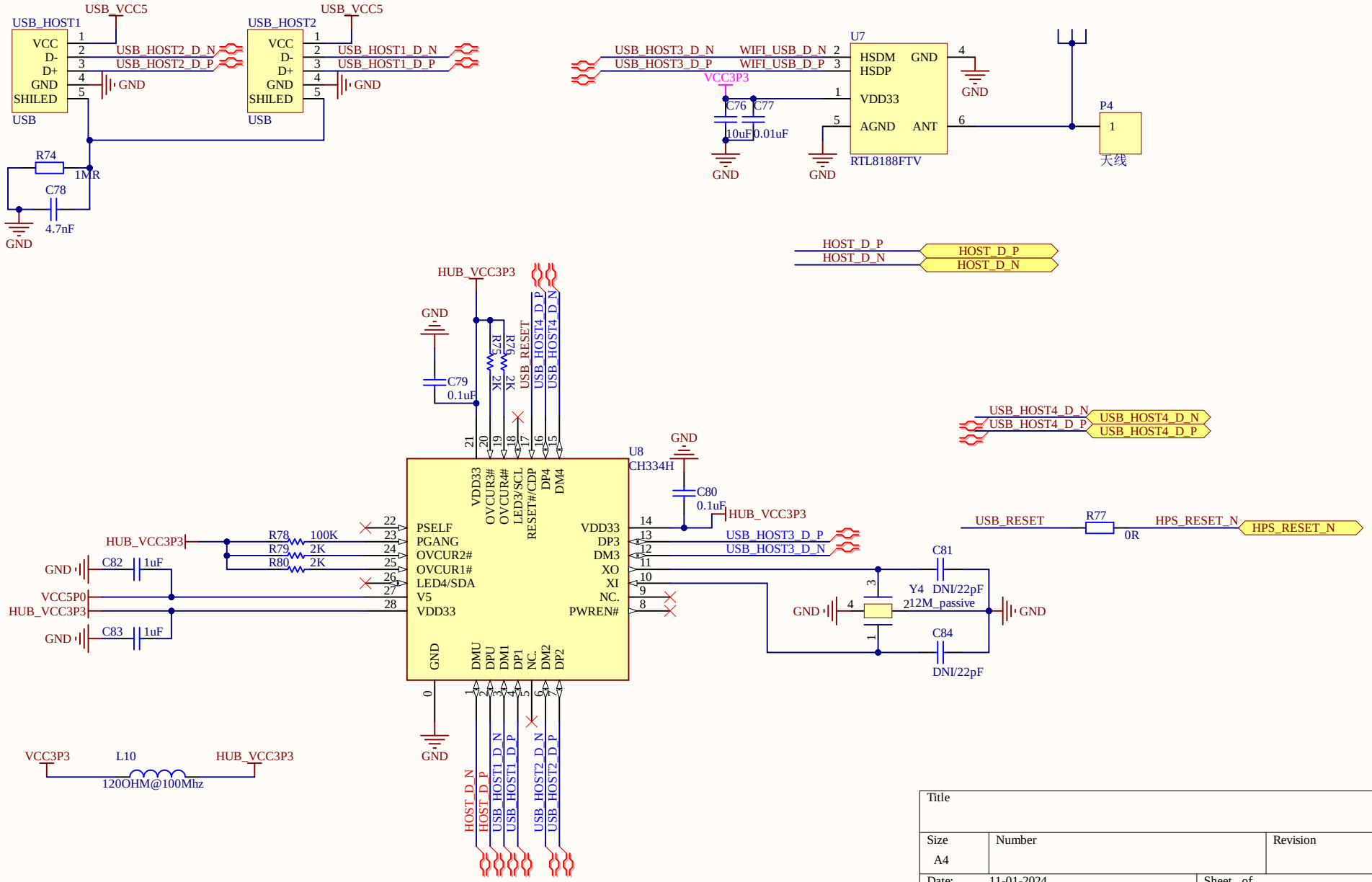

Title		
Size A4	Number	Revision
Date: 11-01-2024	Sheet of	
File: E:\小梅哥FPGA同步空间\..\06_USBHubDemo	Drawn By:	

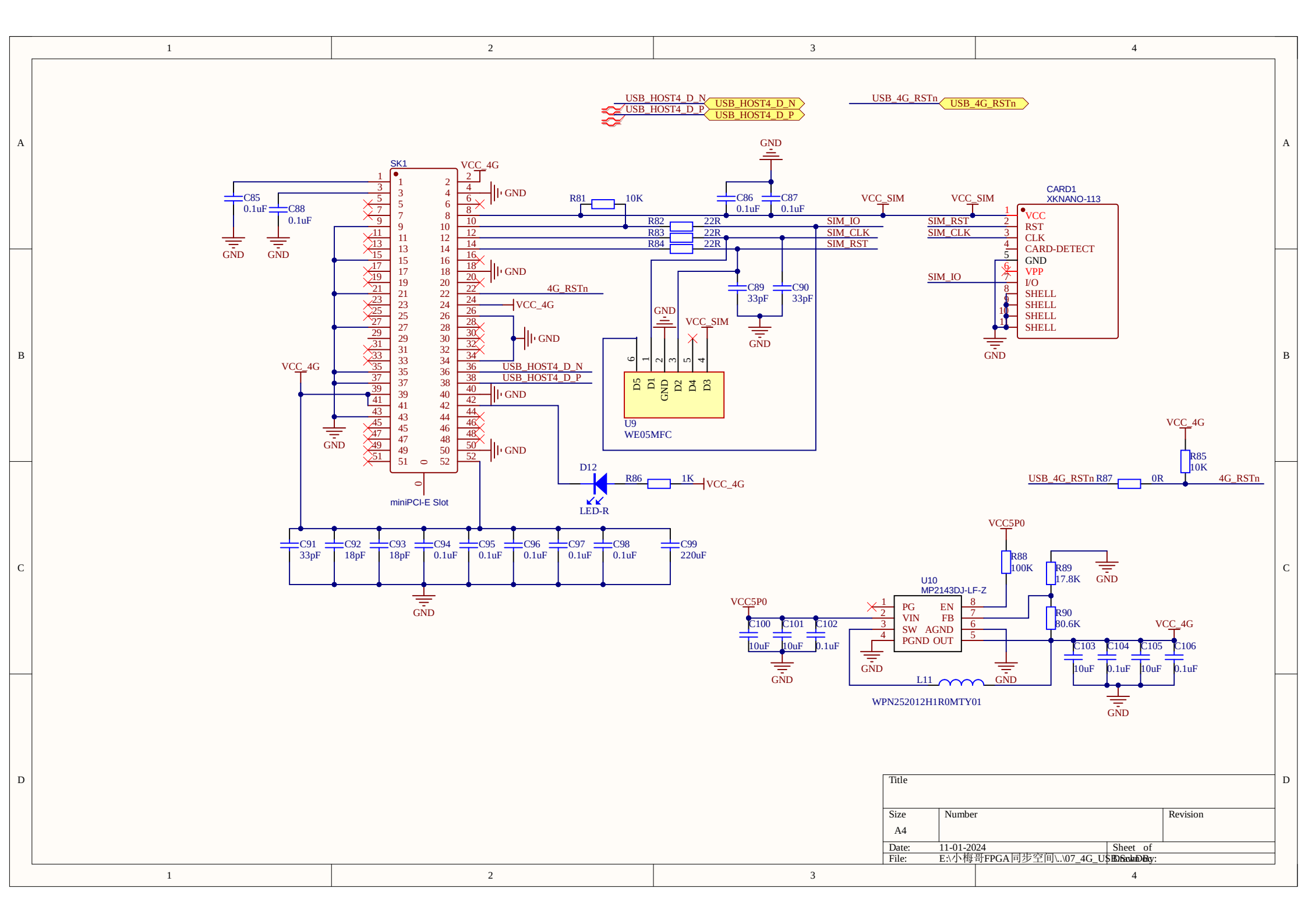
USB_HOST4_D_N
USB_HOST4_D_P
USB_4G_RSTn
SK1
VCC_4G
GND
C85 0.1uF
C88 0.1uF
R81 10K
C86 0.1uF
C87 0.1uF
VCC_SIM
R82 22R
R83 22R
R84 22R
SIM_IO
SIM_CLK
SIM_RST
CARD1
XKNANO-113
VCC
RST
CLK
CARD-DETECT
VPP
I/O
SHELL
C89 33pF
C90 33pF
4G_RSTn
U9
WE05MFC
D5
D1
D2
D3
D4
miniPCI-E Slot
D12
LED-R
R86 1K
R85 10K
R87 0R
C91 33pF
C92 18pF
C93 18pF
C94 0.1uF
C95 0.1uF
C96 0.1uF
C97 0.1uF
C98 0.1uF
C99 220uF
VCC5P0
U10
MP2143DJ-LF-Z
PG
EN
VIN
FB
SW
AGND
PGND
OUT
R88 100K
R89 17.8K
R90 80.6K
C100 10uF
C101 10uF
C102 0.1uF
C103 10uF
C104 0.1uF
C105 10uF
C106 0.1uF
L11
WPN252012H1R0MTY01
Title
Size
A4
Number
Revision
Date: 11-01-2024
File: E:\小梅哥FPGA同步空间\..\07_4G_USB\Sch
Sheet of
Drawn By:

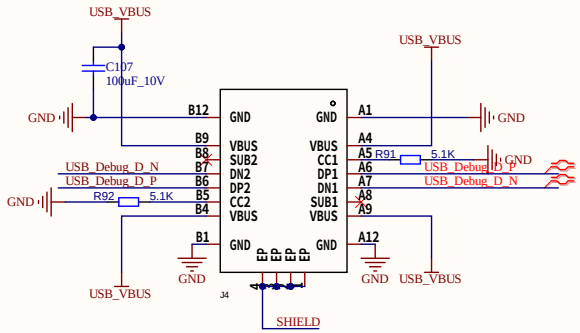

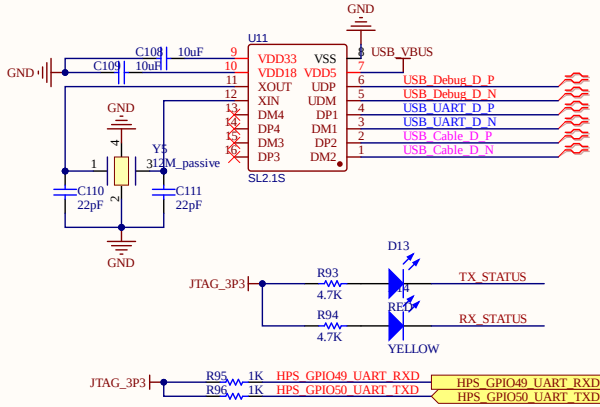

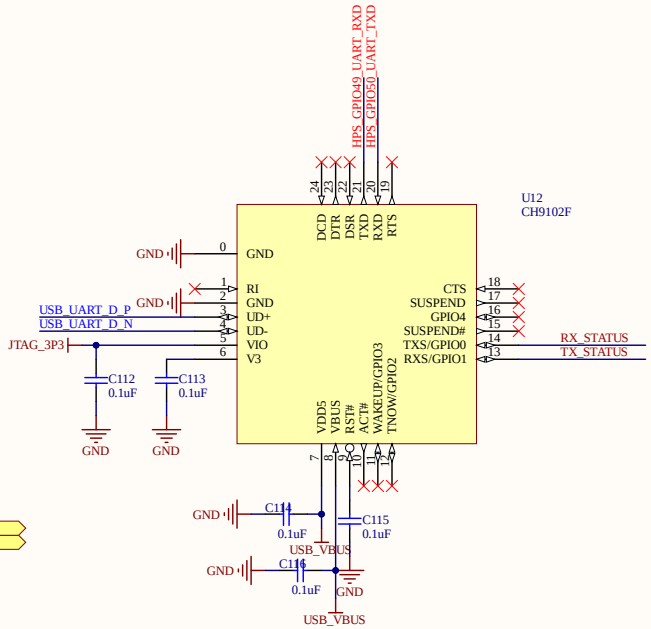

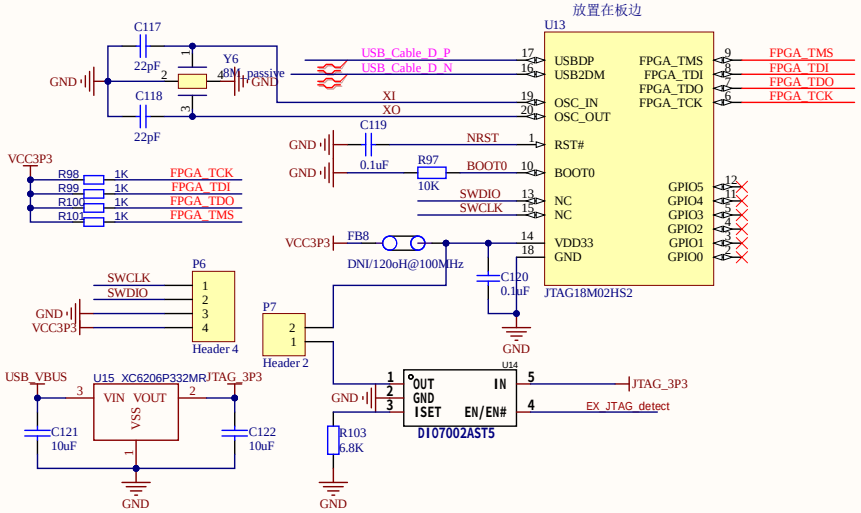

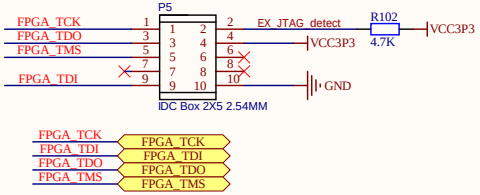

Title		
Size A3	Number	Revision
Date: 11-01-2024	Sheet of	
File: E:\小梅哥FPGA同步空间\..\08_Blaster_DAP.SchDoc	Drawn By:	

HDMI

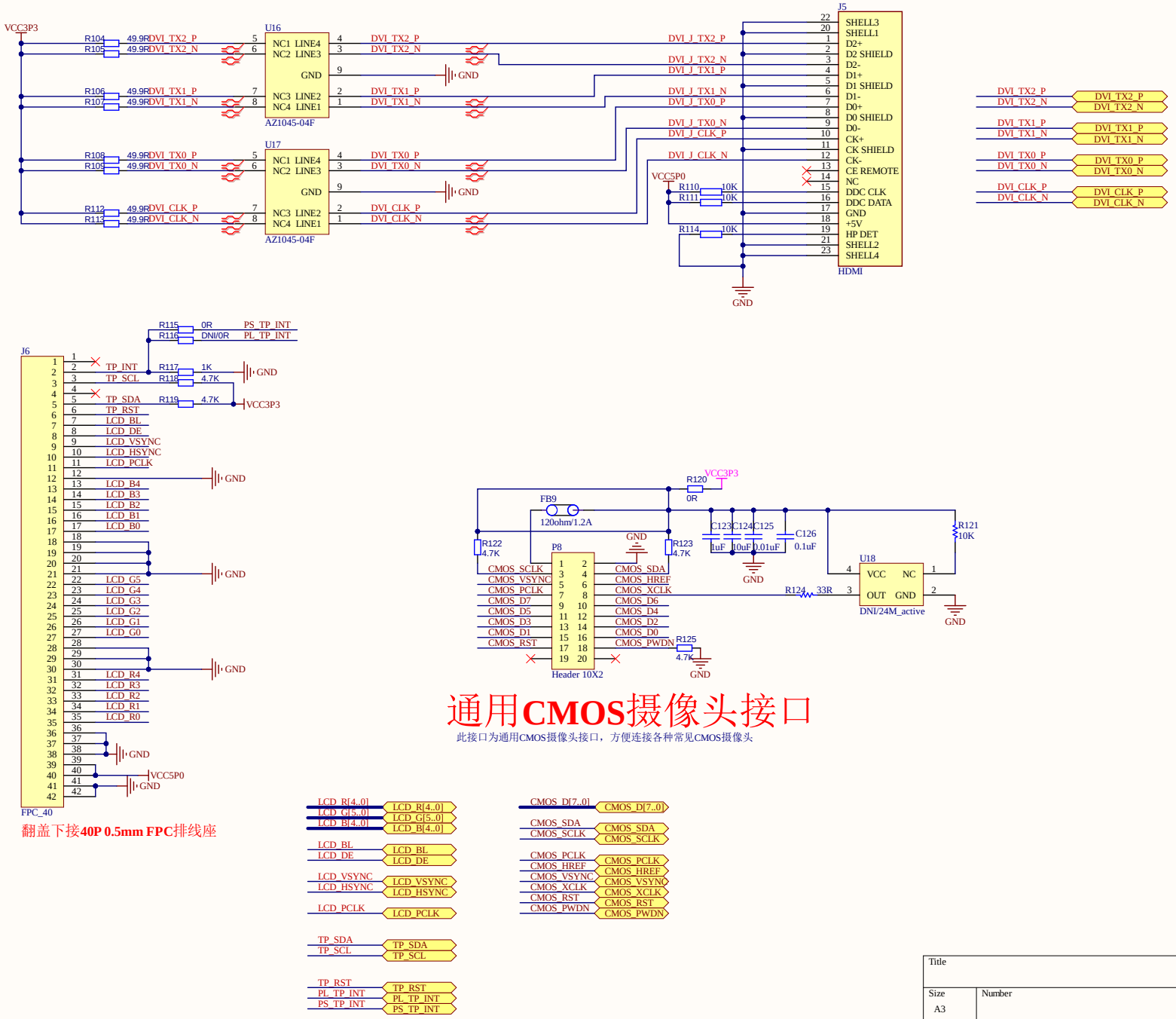

通用CMOS摄像头接口

此接口为通用CMOS摄像头接口，方便连接各种常见CMOS摄像头

Title		
Size A3	Number	Revision
Date: 11-01-2024		Sheet of
File: E:\小梅哥FPGA同步空间\..\09_HDMI_LCD.SchDoc		Drawn By:

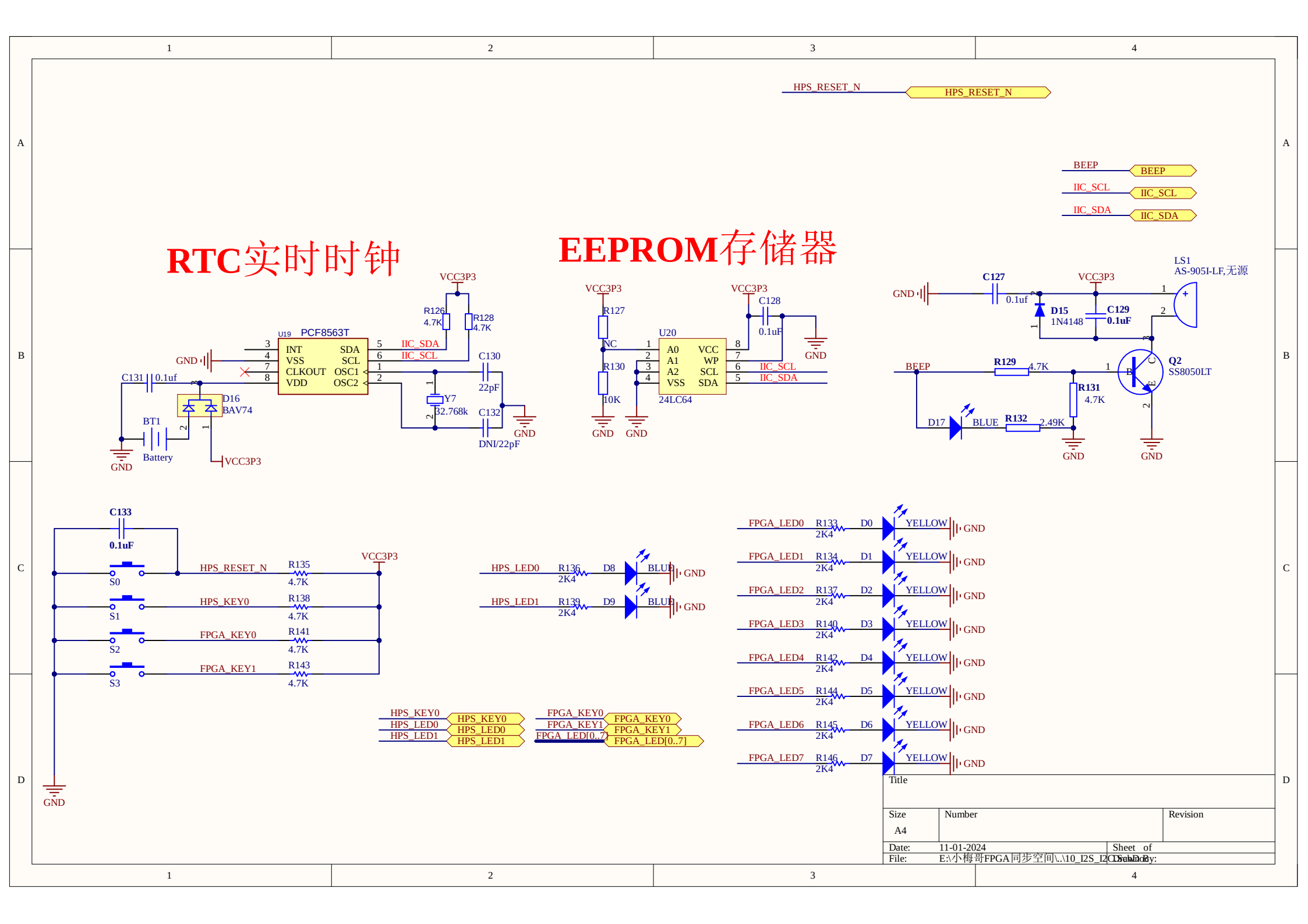
HPS_RESET_N
HPS_RESET_N
BEEP
BEEP
IIC_SCL
IIC_SCL
IIC_SDA
IIC_SDA
RTC实时时钟
EEPROM存储器
VCC3P3
R126
4.7K
R128
4.7K
U19
PCF8563T
INT
VSS
CLKOUT
VDD
SDA
SCL
OSC1
OSC2
IIC_SDA
IIC_SCL
C130
22pF
Y7
32.768k
C132
DNI/22pF
GND
C131
0.1uf
D16
BAV74
BT1
Battery
VCC3P3
R127
NC
R130
10K
U20
A0
A1
A2
VSS
VCC
WP
SCL
SDA
24LC64
C128
0.1uF
LS1
AS-905I-LF,无源
C127
0.1uf
D15
1N4148
C129
0.1uF
Q2
SS8050LT
R129
4.7K
R131
4.7K
D17
BLUE
R132
2.49K
C133
0.1uF
S0
S1
S2
S3
HPS_RESET_N
HPS_KEY0
FPGA_KEY0
FPGA_KEY1
R135
R138
R141
R143
4.7K
HPS_LED0
HPS_LED1
R136
R139
2K4
D8
D9
BLUE
FPGA_LED0
FPGA_LED1
FPGA_LED2
FPGA_LED3
FPGA_LED4
FPGA_LED5
FPGA_LED6
FPGA_LED7
R133
R134
R137
R140
R142
R144
R145
R146
D0
D1
D2
D3
D4
D5
D6
D7
YELLOW
FPGA_LED[0..7]
Title
Size
A4
Number
Revision
Date:
11-01-2024
Sheet of
File:
E:\小梅哥FPGA同步空间\..\10_I2S_I2C\Sch.DsnDrawn By:

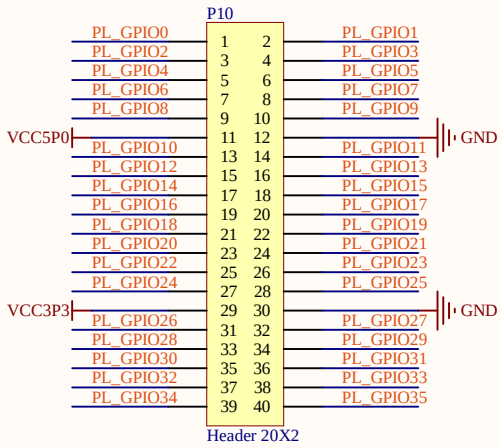

此接口为通用标准扩展接口，兼容友晶DE2开发板扩展口

兼容**DE2**的通用扩展接口



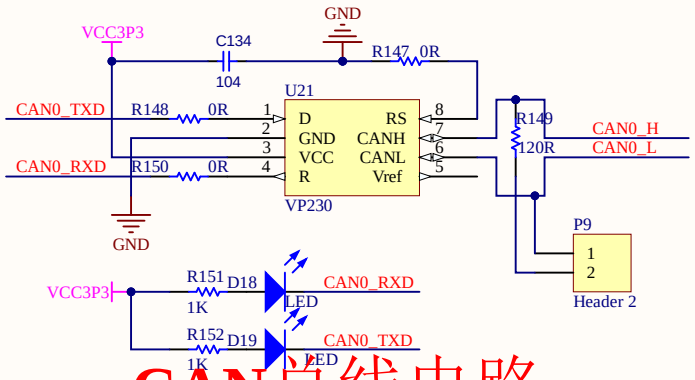

CAN总线电路

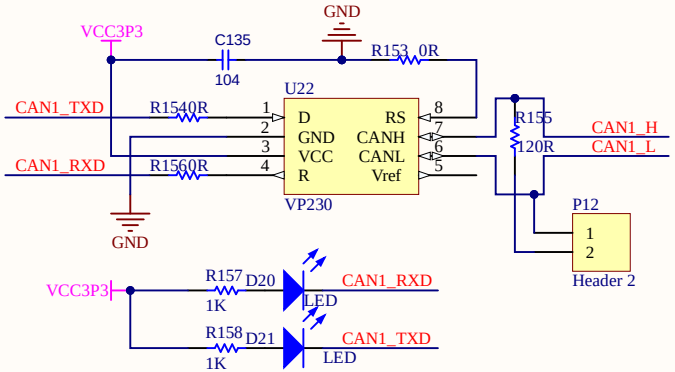

RS485电路

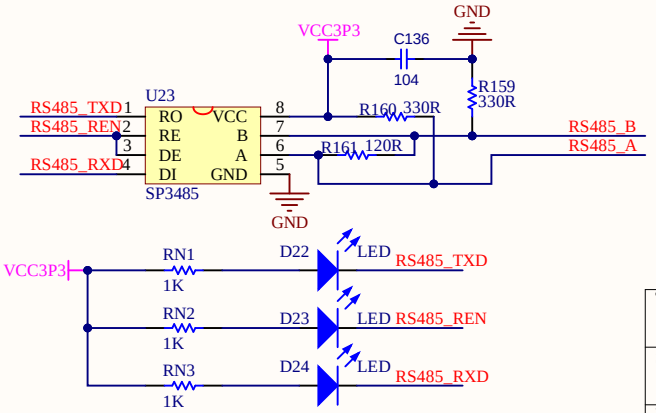

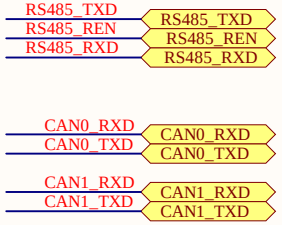

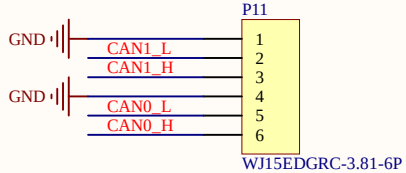

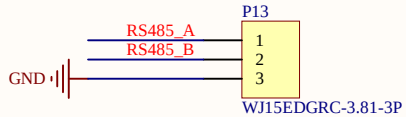

Title		
Size A4	Number	Revision
Date: 11-01-2024	Sheet of	
File: E:\小梅哥FPGA同步空间\..\11_Serial_Screen	Drawn By:	

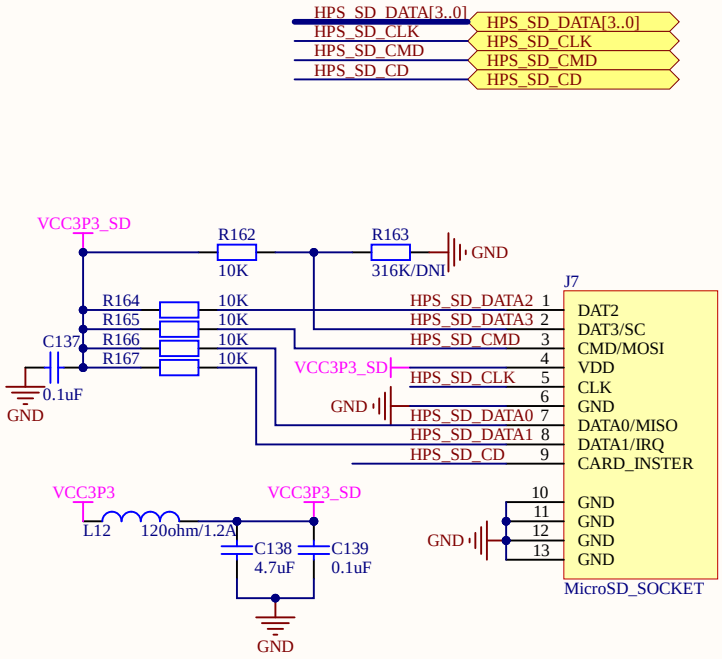

Title		
Size A4	Number	Revision
Date: 11-01-2024		Sheet of
File: E:\小梅哥FPGA同步空间\..\12_SD_CARD\sch.SchDoc		Drawn By:

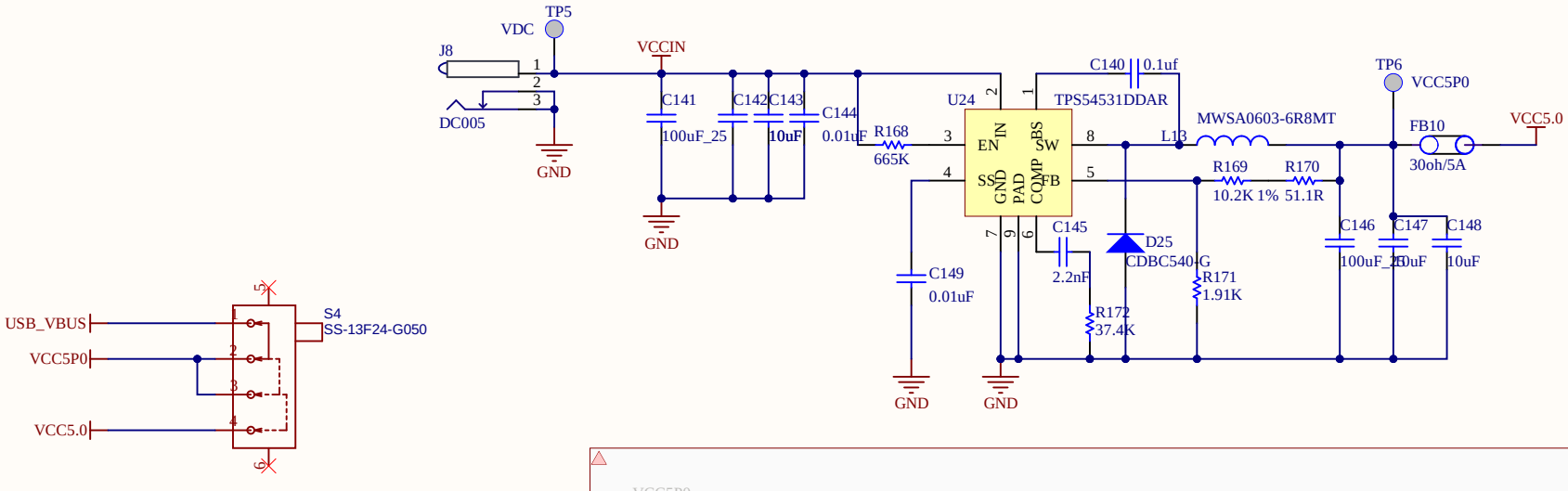

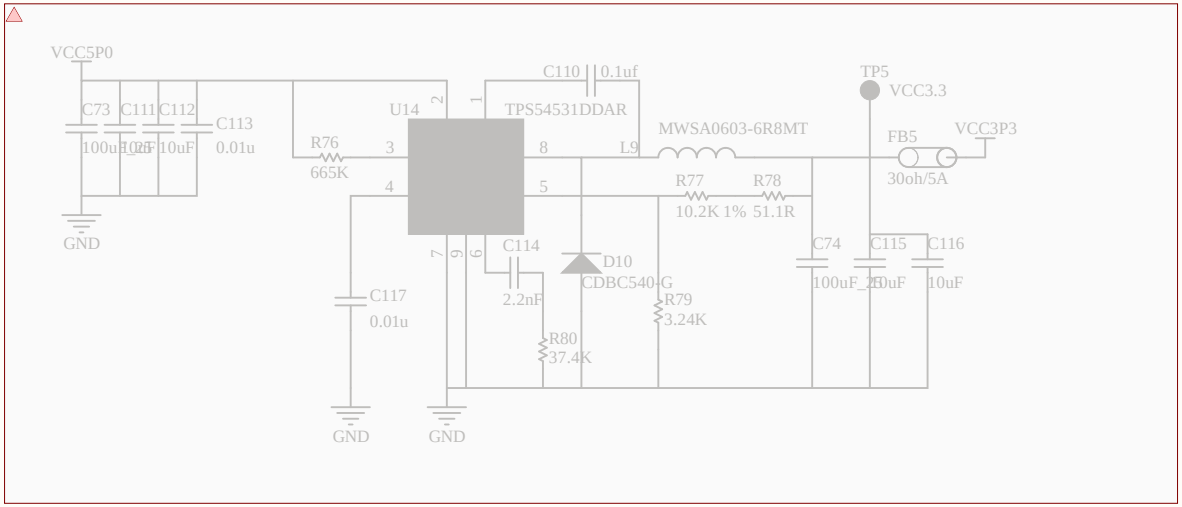

Title		
Size: A4	Number	Revision
Date: 11-01-2024		Sheet of
File: E:\小梅哥FPGA同步空间\..\13_POWER.SchDoc		Drawn By:

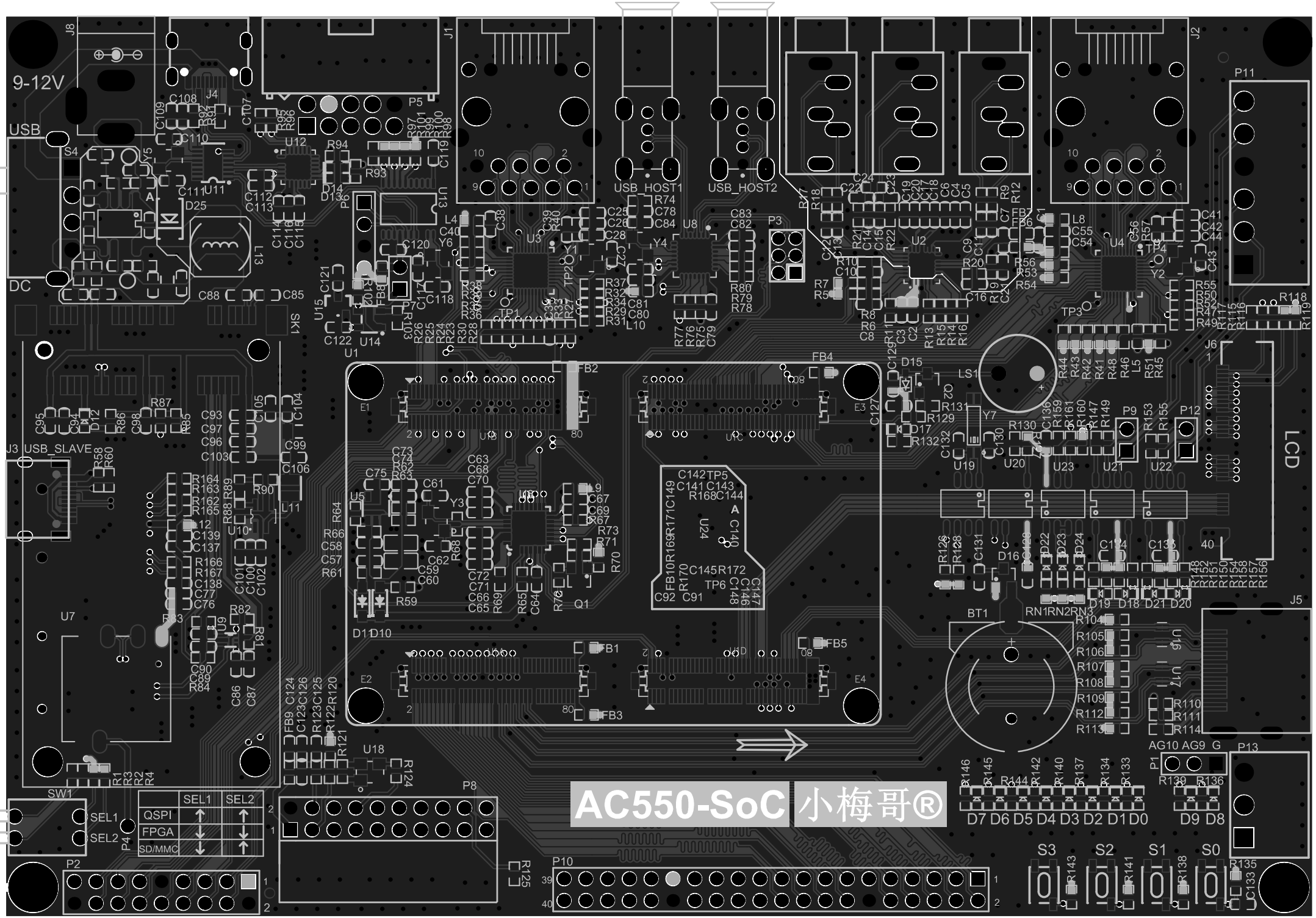
9-12V
USB
DC
USB_HOST1
USB_HOST2
J3 USB_SLAVE
LCD
SW1
SEL1
SEL2
QSPI
FPGA
SD/MMC
AC550-SoC 小梅哥®
D7 D6 D5 D4 D3 D2 D1 D0
D9 D8
S3 S2 S1 S0